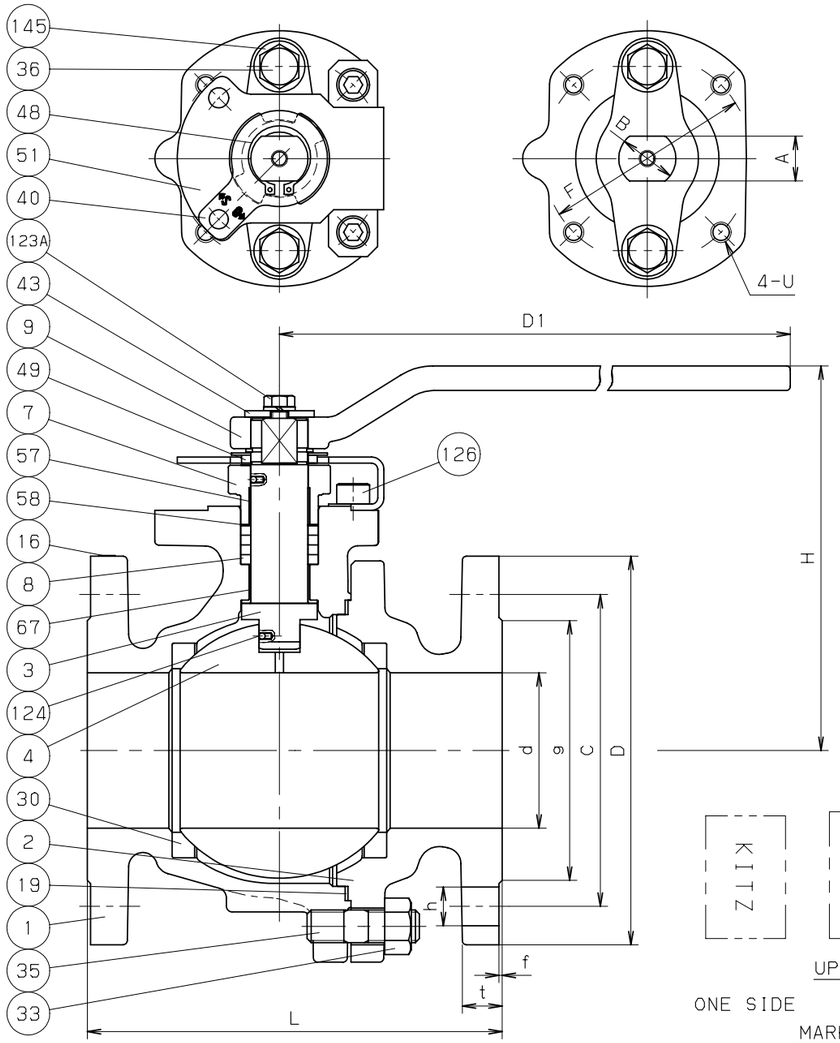

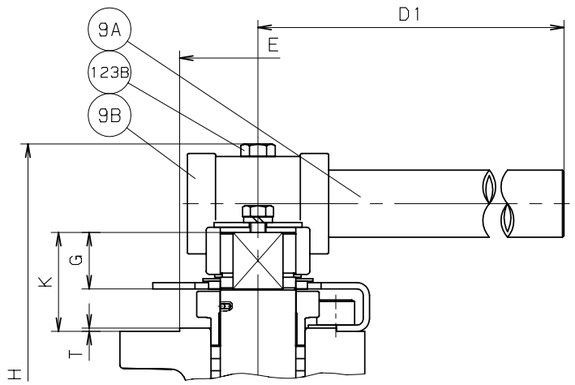

SIZE 6& OVER

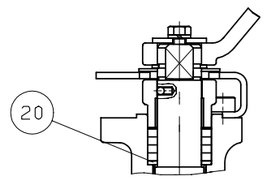

UP TO SIZE 1

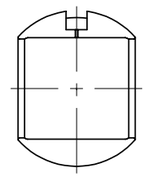

SIZE 5、6

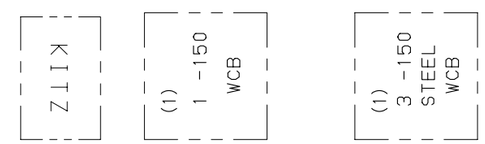

UP TO SIZE 1 SIZE 1.1/2& OVER

ONE SIDE THE OTHER SIDE

MARKING ON THE BODY

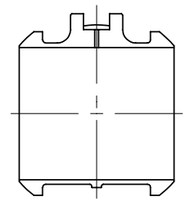

SIZE 8 ONLY

CORED CAVITY

NO	NAME OF PARTS	QTY	MATERIALS	SPECIFICATIONS
				ASTM SPEC.
1	BODY	1	CAST STEEL	A216 Gr.WCB
2	BODY CAP	1	CAST STEEL	A216 Gr.WCB
3	STEM	1	STAINLESS STEEL	A276 TYPE316
4	BALL	1	STAINLESS STEEL	A276 TYPE316 OR
				A351 Gr.CF8M
7	GLAND	1	STAINLESS STEEL	A351 Gr.CF8
8	GLAND PACKING	1S	FLEXIBLE GRAPHITE	
9	HANDLE	1	DUCTILE IRON	(UP TO SIZE 5)
9A	HANDLE BAR	1	CARBON STEEL	(SIZE 6& OVER)
9B	HANDLE HEAD	1	DUCTILE IRON	(SIZE 6& OVER)
16	NAME PLATE	1	STAINLESS STEEL	A276 TYPE304
19	GASKET	1	FLEXIBLE GRAPHITE	
20	PACKING WASHER	1	STAINLESS STEEL	A276 TYPE316L
				(UP TO SIZE 1)
30	BALL SEAT	2	HYPATITE PTFE	
33	CAP NUT	1S	CARBON STEEL	A194 Gr.2H
35	CAP BOLT	1S	ALLOY STEEL	A193 Gr.B7
36	GLAND BOLT	2	STAINLESS STEEL	
40	KEYLOCK PLATE	1	STAINLESS STEEL	A276 TYPE304
43	HANDLELOCK PLATE	1	STAINLESS STEEL	A276 TYPE304
48	SNAP RING	1	STAINLESS STEEL	
49	STOPPER	1	STAINLESS STEEL	A276 TYPE304
51	STOPPER PLATE	1	STAINLESS STEEL	A276 TYPE304
57	GLAND BUSH	1	G/F PTFE	
58	GLAND WASHER	1	STAINLESS STEEL	A276 TYPE304
67	STEM BEARING	1	G/F PTFE	
123A	HANDLELOCK PLATE BOLT	1	STAINLESS STEEL	
123B	HANDLE BOLT	1	STAINLESS STEEL	
124	SPRING & PIN	2S	STAINLESS STEEL	A313 & A276 TYPE316
126	STOPPER PLATE BOLT	2	STAINLESS STEEL	
145	CONED DISC SPRING	2	STAINLESS STEEL	
			1S=1 SET	

DIMENSIONS

UNIT:mm

NOMINAL SIZE						END FLANGE								MOUNTING DEMENSION FOR ACTUATOR									APPROX. MASS
							BOLT HOLE			BOLT												ISO5211 FLANGE TYPE	
in.	mm	d	H	D1	L	D	C	NO.	h	SIZE	g	t	f	A	B	E	F	G	K	T	U		(kg)
1/2	15	14	108	130	108	89	60.5	4	16	1/2	35	11.2	1.6	9	12	25	36	9	22	1	M5	F03	2.6
3/4	20	19	111	130	117	98	70.0	4	16	1/2	43	11.2	1.6	9	12	25	36	9	22	1	M5	F03	2.8
1	25	24	124	160	127	108	79.5	4	16	1/2	51	11.2	1.6	14	18	35	50	14	30	1.5	M6	F05	4.5
1.1/2	40	38	134	230	165	127	98.5	4	16	1/2	73	14.3	1.6	17	22	55	70	17	34	1.5	M8	F07	8.5
2	50	50	143	230	178	152	120.5	4	19	5/8	92	15.9	1.6	17	22	55	70	17	34	1.5	M8	F07	11.4
2.1/2	65	64	179	400	190	178	139.5	4	19	5/8	105	17.5	1.6	22	28	70	102	22	45	2	M10	F10	19.7
3	80	76	189	400	203	190	152.5	4	19	5/8	127	19.1	1.6	22	28	70	102	22	45	2	M10	F10	25
4	100	100	224	460	229	229	190.5	8	19	5/8	157	23.9	1.6	27	36	85	125	27	52	2	M12	F12	45
5	125	123	240	460	356	254	216.0	8	22	3/4	186	23.9	1.6	27	36	85	125	27	52	2	M12	F12	60
6	150	151	315	1000	394	279	241.5	8	22	3/4	216	25.4	1.6	36	48	100	140	36	63	2	M16	F14	93
8	200	202	406	1500	457	343	298.5	8	22	3/4	270	28.6	1.6	46	60	130	165	46	79	2	M20	F16	168

NOTE (1) VALVE SIZE(inch) IDENTIFICATION.

STANDARD		
	FACE TO FACE OR END TO END	ASME B16.10 CLASS 150
	END CONNECTION	ASME B16.5 CLASS 150
	WALL THICKNESS	ASME B16.34 CLASS 150
	PRESSURE TEST	API 598
FIGURE		(Z) 150SCTDZM-FS

CLASS 150 CAST STEEL BALL VALVES

ANTI-STATIC DEVICE, FULL BORE, CONFORM TO ISO5211, FLANGED ENDS.

DATE APPD	JAN.25' 13	DRAWING NO	△		
APPD BY	I. TAKANO	955-B10233	△		
CHKD BY	T. KOYANAGI		△		
DSGND BY	Y. INOUE		△		
DRAWD BY	A. OGAWA	REV-00	MARK	DATE	BY

KITZ CORPORATION

KITZ