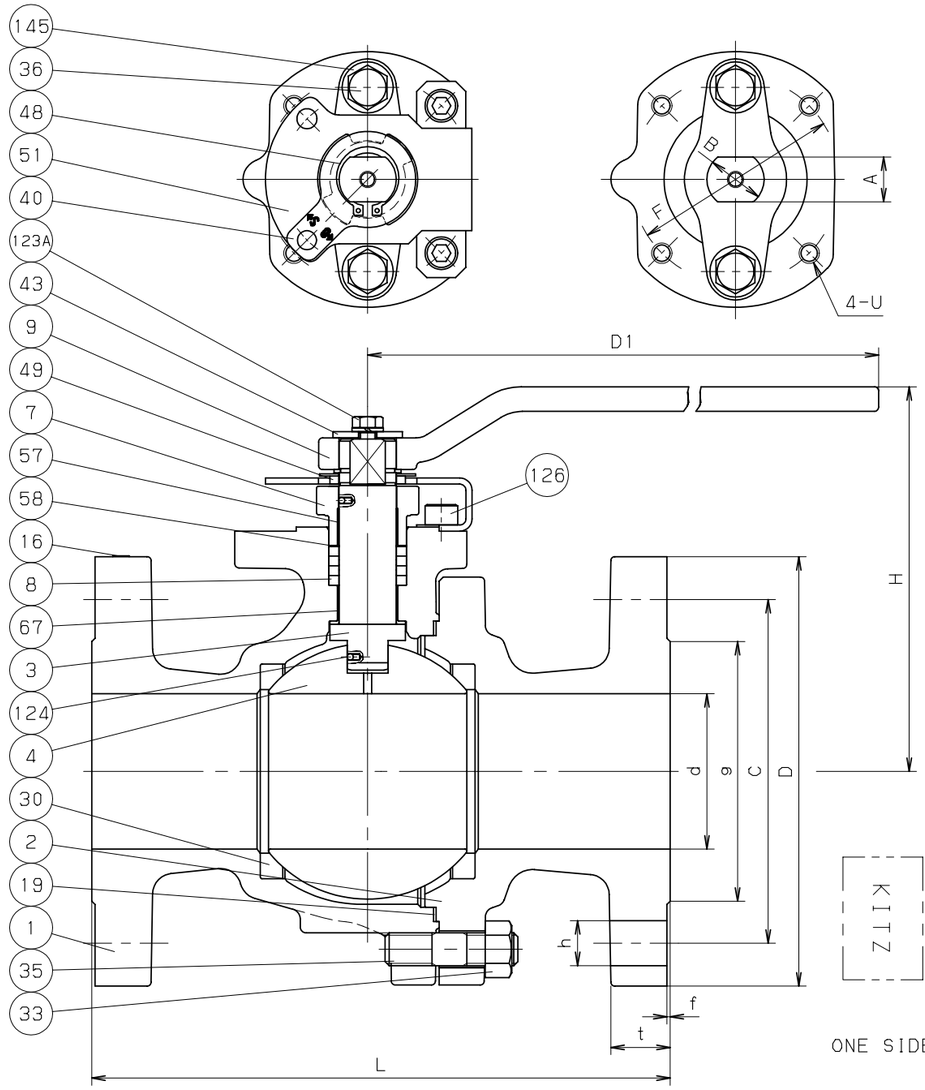

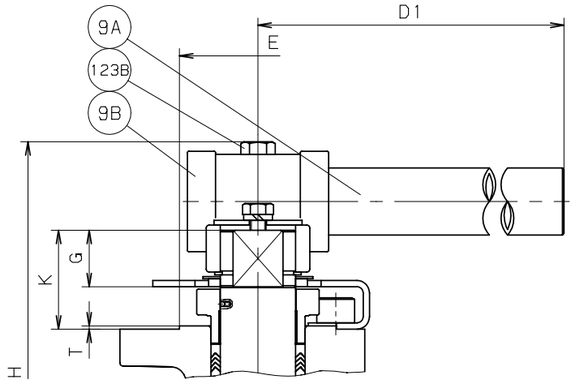

SIZE 4& OVER

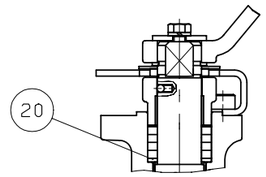

UP TO SIZE 1

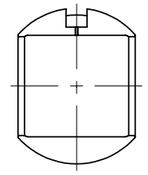

SIZE 6 ONLY

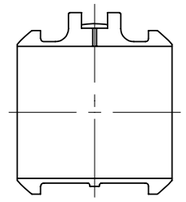

SIZE 8 ONLY
CORED CAVITY

UP TO SIZE 1 SIZE 1.1/2& OVER

ONE SIDE THE OTHER SIDE

MARKING ON THE BODY

NO	NAME OF PARTS	QTY	MATERIALS	SPECIFICATIONS
				ASTM SPEC.
1	BODY	1	CAST STEEL	A216 Gr.WCB
2	BODY CAP	1	CAST STEEL	A216 Gr.WCB
3	STEM	1	STAINLESS STEEL	A276 TYPE316
4	BALL	1	STAINLESS STEEL	A276 TYPE316 OR
				A351 Gr.CF8M
7	GLAND	1	STAINLESS STEEL	A351 Gr.CF8
8	GLAND PACKING	1S	FLEXIBLE GRAPHITE	
9	HANDLE	1	DUCTILE IRON	(UP TO SIZE 3)
9A	HANDLE BAR	1	CARBON STEEL	(SIZE 4& OVER)
9B	HANDLE HEAD	1	DUCTILE IRON	(SIZE 4& OVER)
16	NAME PLATE	1	STAINLESS STEEL	A276 TYPE304
19	GASKET	1	FLEXIBLE GRAPHITE	
20	PACKING WASHER	1	STAINLESS STEEL	A276 TYPE316L
				(UP TO SIZE 1)
30	BALL SEAT	2	HYPATITE PTFE	
33	CAP NUT	1S	CARBON STEEL	A194 Gr.2H
35	CAP BOLT	1S	ALLOY STEEL	A193 Gr.B7
36	GLAND BOLT	2	STAINLESS STEEL	
40	KEYLOCK PLATE	1	STAINLESS STEEL	A276 TYPE304
43	HANDLELOCK PLATE	1	STAINLESS STEEL	A276 TYPE304
48	SNAP RING	1	STAINLESS STEEL	
49	STOPPER	1	STAINLESS STEEL	A276 TYPE304
51	STOPPER PLATE	1	STAINLESS STEEL	A276 TYPE304
57	GLAND BUSH	1	G/F PTFE	
58	GLAND WASHER	1	STAINLESS STEEL	A276 TYPE304
67	STEM BEARING	1	G/F PTFE	
123A	HANDLELOCK PLATE BOLT	1	STAINLESS STEEL	
123B	HANDLE BOLT	1	STAINLESS STEEL	
124	SPRING & PIN	2S	STAINLESS STEEL	A313 & A276 TYPE316
126	STOPPER PLATE BOLT	2	STAINLESS STEEL	
145	CONED DISC SPRING	2	STAINLESS STEEL	
			1S=1 SET	

DIMENSIONS

UNIT:mm

NOMINAL SIZE						END FLANGE								MOUNTING DEMENSION FOR ACTUATOR									APPROX. MASS (kg)
							BOLT HOLE			BOLT												ISO5211 FLANGE TYPE	
in.	mm	d	H	D1	L	D	C	NO.	h	SIZE	g	t	f	A	B	E	F	G	K	T	U		
1/2	15	14	108	130	140	95	66.5	4	16	1/2	35	14.3	1.6	9	12	25	36	9	22	1	M5	F03	3.0
3/4	20	19	111	130	152	117	82.5	4	19	5/8	43	15.9	1.6	9	12	25	36	9	22	1	M5	F03	4.5
1	25	24	124	160	165	124	89.0	4	19	5/8	51	17.5	1.6	14	18	35	50	14	30	1.5	M6	F05	7.2
1.1/2	40	38	134	230	190	156	114.5	4	22	3/4	73	20.7	1.6	17	22	55	70	17	34	1.5	M8	F07	13.9
2	50	50	143	230	216	165	127.0	8	19	5/8	92	22.3	1.6	17	22	55	70	17	34	1.5	M8	F07	18.4
2.1/2	65	64	179	400	241	190	149.0	8	22	3/4	105	25.4	1.6	22	28	70	102	22	45	2	M10	F10	27
3	80	76	189	400	283	210	168.0	8	22	3/4	127	28.6	1.6	22	28	70	102	22	45	2	M10	F10	38
4	100	100	251	750	305	254	200.0	8	22	3/4	157	31.8	1.6	27	36	85	125	27	52	2	M12	F12	65
6	150	151	315	1000	403	318	270.0	12	22	3/4	216	36.6	1.6	36	48	100	140	36	63	2	M16	F14	127
8	200	202	406	1500	502	381	330.0	12	25	7/8	270	41.3	1.6	46	60	130	165	46	79	2	M20	F16	212

NOTE (1) VALVE SIZE(inch) IDENTIFICATION.

STANDARD		
	FACE TO FACE OR END TO END	ASME B16.10 CLASS 300
	END CONNECTION	ASME B16.5 CLASS 300
	WALL THICKNESS	ASME B16.34 CLASS 300
	PRESSURE TEST	API 598
	PRODUCT CODE	(Z)300SCTDZM-FS
	FIGURE	300SCTDZ<GT102>

CLASS 300 CAST STEEL BALL VALVES

ANTI-STATIC DEVICE, FULL BORE, CONFORM TO ISO5211, FLANGED ENDS.

DATE APPD	Aug.13' 15	DRAWING NO	△		
APPD BY	T. KOYANAGI	955-B20238	△		
CHKD BY	Y. ASAKAWA		△		
DSGND BY	Y. OSADA		△		
DRAWD BY	M. WADA	REV-01	MARK	DATE	BY

KITZ CORPORATION

KITZ