Pressure Reducing Valve Selection

Application				Max. Inlet Pressure (MPa)	Reduced Pressure (MPa)	Model	Type					Page
Steam	Air	Water	Oil				Pilot Type	Direct Type	Bellows	Diaphragm	Piston	
●				1.0	0.02-0.4	GD-6N		●		●		44
●					0.03-0.8	GP-27	●				●	40
●					0.05-0.9	GP-1000 Series	●				●	32
●				1.6	0.05-1.4	GP-1000EN・1000H	●				●	38
●				1.7	0.02-1.0	GD-30		●	●			42
●				2.0	0.05-0.9	GPK-2001	●			●		22
●					0.02-1.0	GD-30S		●	●			42
●						GD-45P・45		●	●			43
●					0.02-1.4	GP-2000	●			●		19
●					0.05-1.4	GDK-2000		●		●		24
●					0.2-1.4	GPK-2003	●			●		22
●				3.0	0.02-2.0	GP-2000CS	●			●		30
	●			0.3	0.002-0.2	GD-4		●		●		83
	●			0.4	0.0005-0.02	GD-400・400SS		●		●		81
	●			0.8	0.002-0.2	GD-4B		●		●		83
	●			0.99	0.05-0.85	GD-9		●		●		83
	●			1.0	0.05-0.9	GP-1000T Series	●				●	75
	●	●	●		0.02-0.4	GD-6		●		●		69
	●	●	●		0.05-0.7	GD-200・200C・20		●		●		45
	●					GD-26G・27G		●		●		78
	●					GD-26GS・27GS		●		●		79
	●	●				GD-8N		●		●		83
●	●			2.0	0.02-0.5	GD-41G・43G		●		●		67
	●	●	●		0.05-1.0	GD-200H		●		●		45
		●		1.0	0.05-0.25	GD-15・15C		●		●		83
		●			0.05-0.3	GD-38 Series		●		●		60
		●				GD-46 Series		●		●		57
		●			0.05-0.35	GD-25GJ・25JC・25GJ-K		●		●		64
		●			0.05-0.7	GD-26-N・27-N		●		●		52
		●				GD-26S・27S		●		●		54
		●	●			GD-7・7B		●			●	71
		●			0.07-0.7	GP-50	●				●	83
		●		1.6	0.05-0.55	GD-24・24B		●		●		50
●		●		2.0	0.02-0.5	GD-41・43		●		●		67

Selection of Pressure Reducing Valve for Steam

What is a Pressure Reducing Valve ??

A reducing valve is a regulating valve which keeps outlet pressure of fluid at a certain and lower level than inlet pressure.
The original purpose of a reducing valve is, not just reducing the pressure of fluids, but also dynamically controlling the flow rate that fluctuates in response to load variations. Many types of reducing valves are available, and each of them has unique characteristics derived from each operation method, flow characteristic and material of part. None of reducing valves can meet all the requirements for pressure reduction in all sorts of applications. It is therefore important to select an optimum reducing valve for each use.

Applications	・Food machinery ・Laundry equipment ・Small heaters ・Steam sterilization system, etc. Equipment and facilities of small flow rate	・Air-conditioning facilities ・Building facilities ・Plant facilities ・Irrigation field, etc. Equipment, facilities and piping systems requiring low or medium flow rate	・Air-conditioning facilities ・Building facilities ・Plant facilities ・Main pipes of steam line ・Other applications requiring high accuracy Equipment, facilities and piping systems requiring high flow rate and stable pressure control

Types	**Direct acting type**	**Pilot operated type**	
	Sensing element for reduced pressure itself directly actuates the valve.	Pilot valve senses reduced pressure and controls the pressure that actuates operating parts, such as piston or diaphragm which opens and closes the main valve.	
		Piston type	**Diaphragm type**
		This type offers excellent durability since a piston is adopted at the operating part of the main valve.	This type secures outstanding controllability and large flow rate by wide open main valve with a large pressure receiver of a diaphragm.
	Though direct-acting type is easily affected by the change in flow rate compared with pilot-operated type, it is compact and suitable for small equipment with stable flow rate.	This type can be applied to a frequent use or wide-ranged equipment and facilities. It secures the stable control and excellent durability achieved by a piston at the pressure receiver.	This valve is a perfect choice for equipment and facilities with a large flow rate. It can be applied to facilities, etc. where the stable control of a slight variation in the reduced pressure is required, or where the flow rate violently fluctuates.

Major Products for Steam	**Compact size, for small flow rate: GD-30 Series**	**For various purposes: GP-1000 Series**	**High performance: GP-2000 Series**

Note for Selecting Pressure Reducing Valves

Flow Characteristics

In selecting a pressure reducing valve, the principle of "the greater embraces the less" can not be applied. Too much bigger valve is less durable and prone to cause a rise in the reduced pressure at no load. The nominal size of inlet piping, outlet piping, and pressure reducing valve should be properly and individually selected. The nominal size of the pipe at reduced pressure side, which is inevitably larger than that of the pressure reducing valve, should be large enough to cover large volume of steam with lower pressure. It is very important to select a valve of the right model and right size according to the flow rate and the pressure of steam.

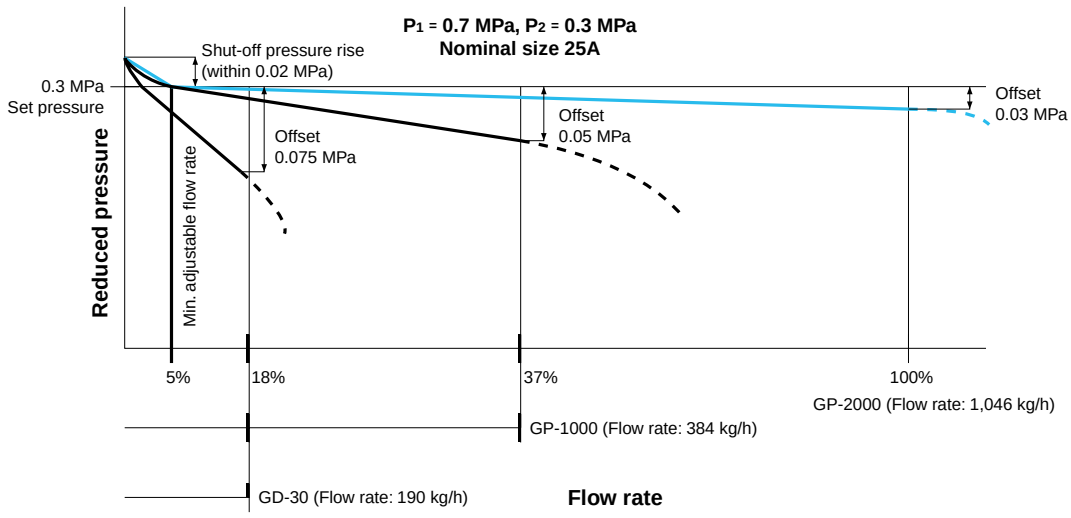

Reduced Pressure Sensing Method and Pressure Controllability

When a serious pressure loss and violent fluctuation with a wide range in flow rate are observed at the outlet piping, the pressure stability at steam equipment can be installing an external sensing pipe that directly introduce the outlet pressure from the installed point. It is because the sensing pipe enables the pressure reducing valve to detect the accurate outlet pressure not affected by steam turbulence.

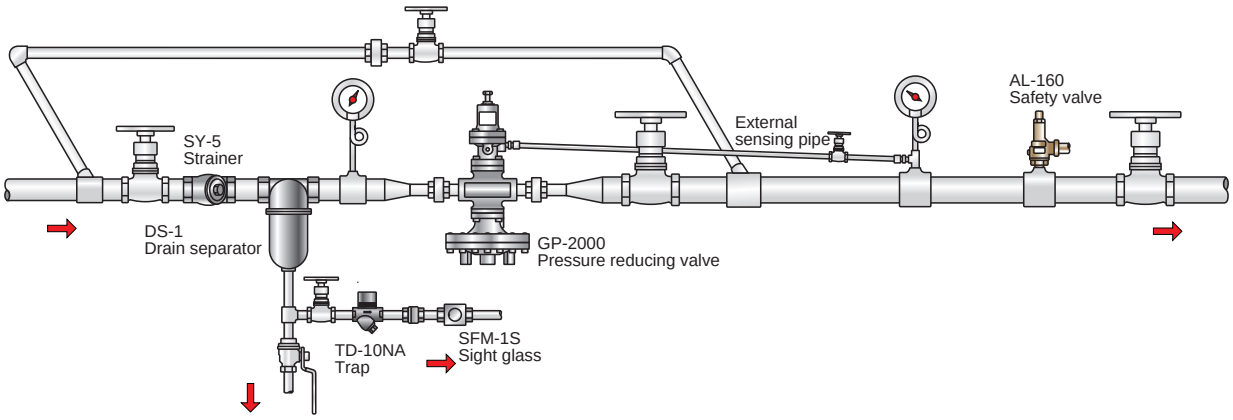

Features of Pilot Operated Diaphragm Type ＜GP-2000＞

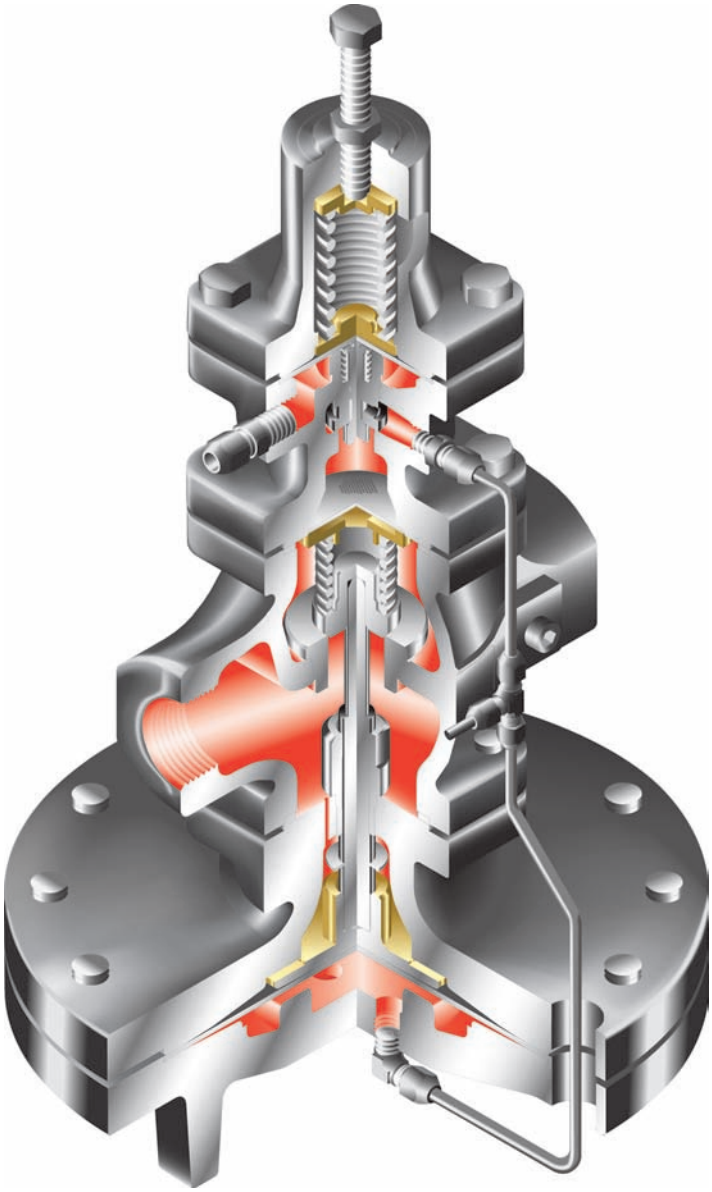

1: Greater capacity

Large-size main diaphragm lifts larger main valve than other types of the pressure reducing valves, such as piston and bellows, and it allows a greater steam capacity. Large-size main diaphragm can lead a greater steam capacity per line size.

2: Accurate control

Large-size main diaphragm is more sensitive to pressure fluctuation, and the valve adjusts the outlet pressure in an accurate fashion. Compared to an internal sensing type, this external sensing type can avoid the effect of turbulence which causes inaccurate outlet pressure control.

3: Flexibility

GP-2000 Series are designed for maximum flexibility; thereby they are enabled to be used in conjunction with other valves mounted in your system. GP-2000 Series offer a broad lineup to meet various applications and conditions, regardless of control purpose, installation space and designed method of use.

4: Variations

Combination valve

CP-2005
Pressure & Temperature control

Air-loaded pressure reducing valve

GDK-2000
Direct acting

GPK-2001
Pilot operated

Advantage of Yoshitake Products ＜GP-2000＞

Wide Range Ability

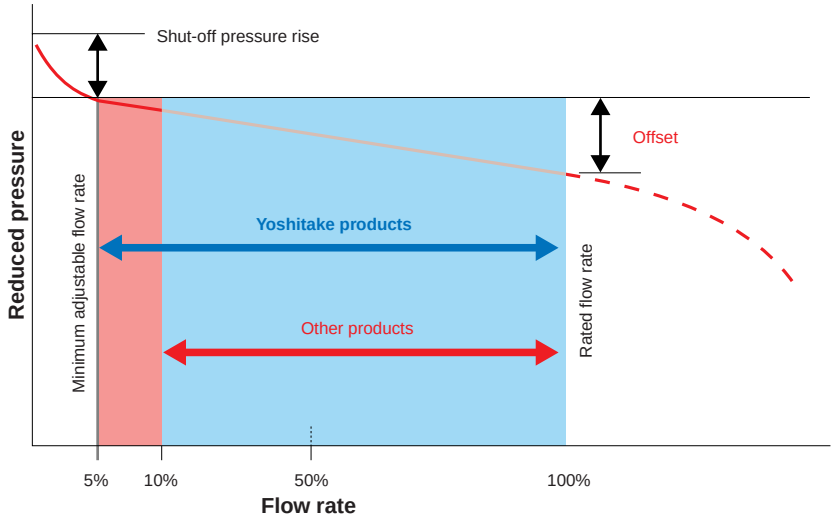

Advantage: Wide range of steam capacity can be controlled with only one valve.
GP-2000 handles wide range of steam capacity. Yoshitake products can handle 5% of rated flow as the minimum. Most of other products on the market can adjust 10% as the minimum.

Excellent Performance in On-Off Use

Due to spherical shape of main valve, leakage from the main valve is only 0.01% of rated flow rate complying to ANSI Class IV. The most suitable line is

DEAD-END service such as ON-OFF use (Forming machine, etc.)

Normal flat main valve causes leakage easily and **not suitable** for On-Off service.

Leakage Class	Maximum Seat Leakage	Reference
Class I	—	By agreement between user and supplier
Class II	0.5% of rated valve capacity	Commercial double-seat valves or balanced single-seat valves with a piston ring seal and metal-to-metal seats
Class III	0.1% of rated valve capacity	Commercial double-seat valves or balanced single-seat valves with a higher degree of seat and seal tightness
Class IV	0.01% of rated valve capacity	Commercial unbalanced single-seat valves and balanced single-seat valves with extra tight piston rings or other sealing means and metal-to-metal seats
Class V	abbreviation	Valves for critical applications where the valve is closed for long period of time with high defferential pressure across the seating surfaces Metal seat, unbalanced single-seat valves or balanced single-seat designs with exceptional seat and seal tightness
Class VI	abbreviation	Resilient seating single-seat valves with "O" rings or similar gapless seals

Excerpt from ANSI / FCI 70-2-2006 Control Valve Seat Leakage

Long Durability

Due to special patented shape in the diaphragm case, the main diaphragm is equally pressurized and also stands for long time of usage. Compared to others on the market, the main diaphragm has ten times longer life.

Features of Pilot Operated Piston Type ＜GP-1000＞

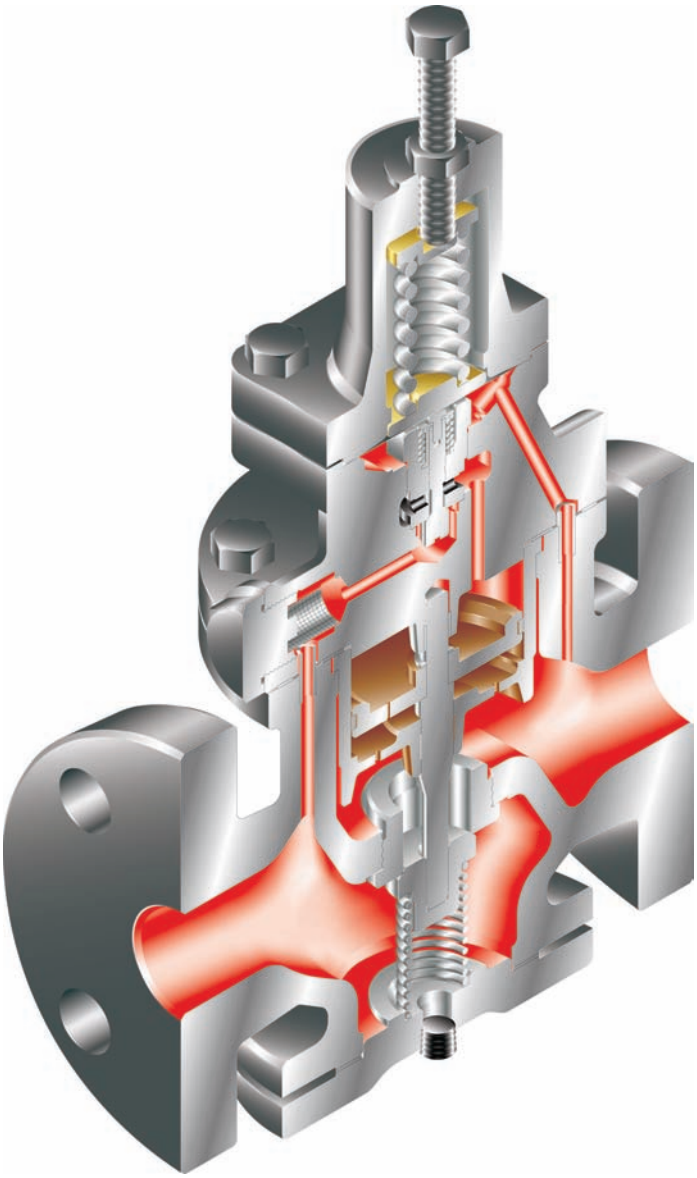

1: Greater capacity and accuracy
Two valves are incorporated in the piston type pressure reducing valve. The pilot valve controls the pressure to piston, which opens larger main valve. Therefore, the greater capacity and accuracy are obtained in piston type pressure reducing valve compared to direct acting pressure reducing valve.

2: Easy installation
No need to install a sensing pipe additionally since designed as internal sensing type. Easy installation and a lot of flexibility in installation compared to the external sensing type.

3: Incorporating new design
Piston & Cylinder:
"Twin Guide Design" structure keeps stable vertical operation and ensures accurate operation over an extended time period.

Pull-up Pilot Valve:
Pull-up design ensures tight seal for a long period of time.

Main valve:
Spherical main valve ensures a tight shut-off meeting ANSI Class Ⅳ and can be applied to dead-end service line.

4: Variations

Easy adjustment
GP-1001
With plastic handle

For remote control
GP-1200
Air-loaded type

Anti-corrosion
GP-1000AS
All stainless steel made

Features of Direct Acting Type ＜GD-30＞

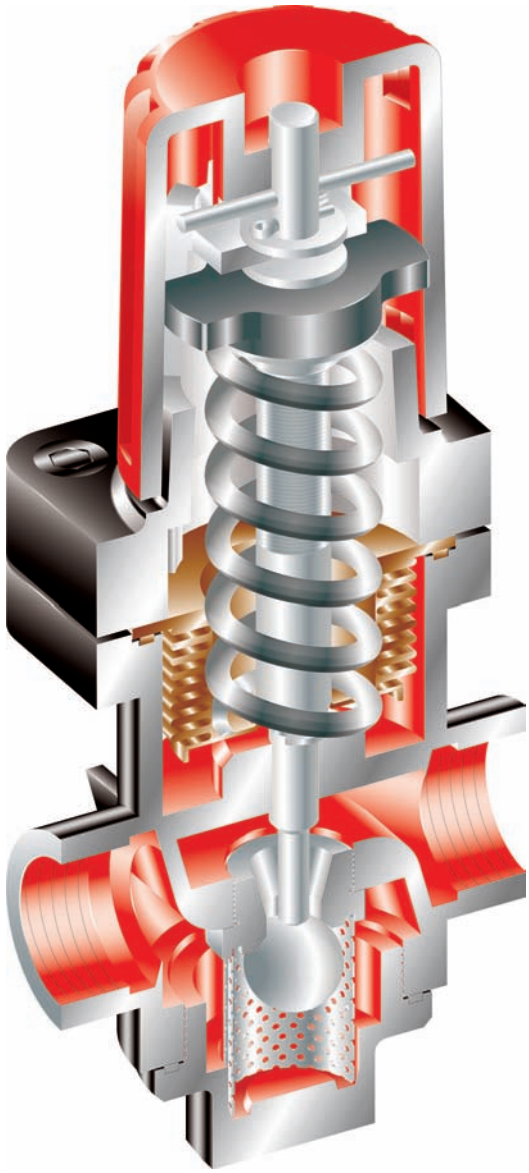

1: Easy pressure setting
Red colored plastic cap allows changing the set pressure without tools. Simple operation is suitable for the line that requires frequent changes in set pressure.

2: Simple and compact design
Fewer parts and convoluted phosphor bellows enable smaller sized body. The smallest and the most economical pressure reducing valve in our lineup permits easy maintenance.

3: Variations
Different body materials are available including stainless steel and ductile cast iron. They are suitable for a wide range of applications, including kitchen systems, cleaning machines, food processing equipment, sterilizers, air conditioning equipment, etc.

4: Variations

Cast bronze
GD-30

Stainless steel
GD-30S

Ductile cast iron
GD-45 (without handle)
GD-45P (with handle)

Selection of Pressure Reducing Valve for Liquid

What is a Pressure Reducing Valve ??

A reducing valve is a regulating valve which keeps outlet pressure of fluid at a certain and lower level than inlet pressure.
Selecting proper pressure reducing valve is a key to maintain stable reduced pressure. Offering direct acting pressure valve is an answer from Yoshitake Inc.

Applications

- Construction equipment
- Irrigation
- Industrial or commercial air conditioning
- Building utility system
- Industrial plant system

- High-rise buildings
- Complex housing unit

Types

Balancing type

Pressure balance structure can keep the reduced pressure at a constant level without being affected by the inlet pressure.

Direct acting type

Most of Yoshitake pressure reducing valve for water are categorized as direct acting type. It controls the reduced pressure even for wide range of water capacity and allows quicker response than pilot operated type. In addition, Yoshitake direct acting pressure reducing valve solves various problems such as vibration and noise.

Major Products

GD-200	GD-26 Series	GD-46 Series
40-3400 L/min	30-1800 L/min	30-50 L/min

Features of Direct Acting Type for Water ＜GD-200＞

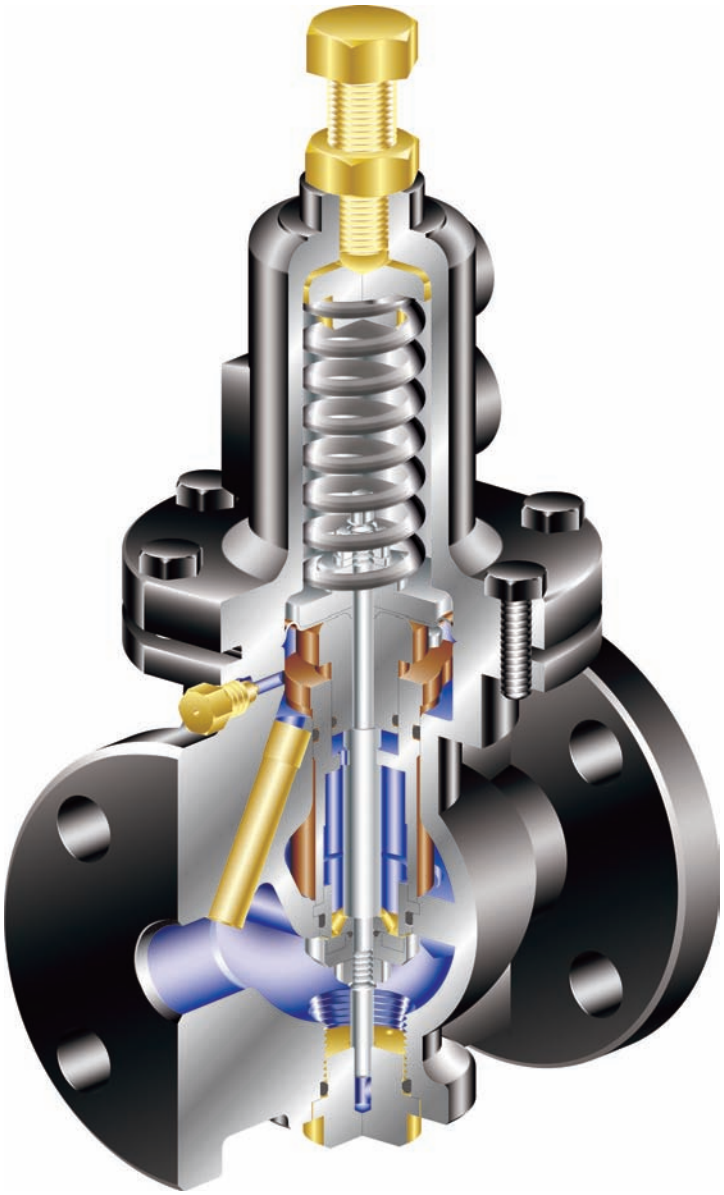

1: Accurate control
Highly accurate control is obtained with a large diaphragm and a pressure balancing mechanism, which maintains a constant reduced pressure.

2: Simple and suitable design
The product consists of less parts than a pilot operated valve and rubber diaphragm sensitively responds to slight pressure change. All materials are advisedly selected and long life durability is accomplished.

3: Variations
Electrodeposition coating is applied as standard painting. Powder and Nylon coating both inside and outside of the body for superior anti-corrosion are also available for wide range of liquid applications.

GD-200
Standard model

GD-200C
Nylon 11 coating model

GD-200HS
Epoxy powder coating model

Nominal Size Selection of Pressure Reducing Valve

In selecting a pressure reducing valve, it is important to consider an appropriate nominal size. To select the optimum size, it is empirically recommended to determine its nominal size in 20% to 80% range of rated flow rate. If the operating flow rate is near to the rated flow rate, the valve constantly and fully runs, leading to shortened service life. If the operating flow rate is near to the minimum adjusting flow rate, initial cost becomes expensive.

How to Select the Optimum Size

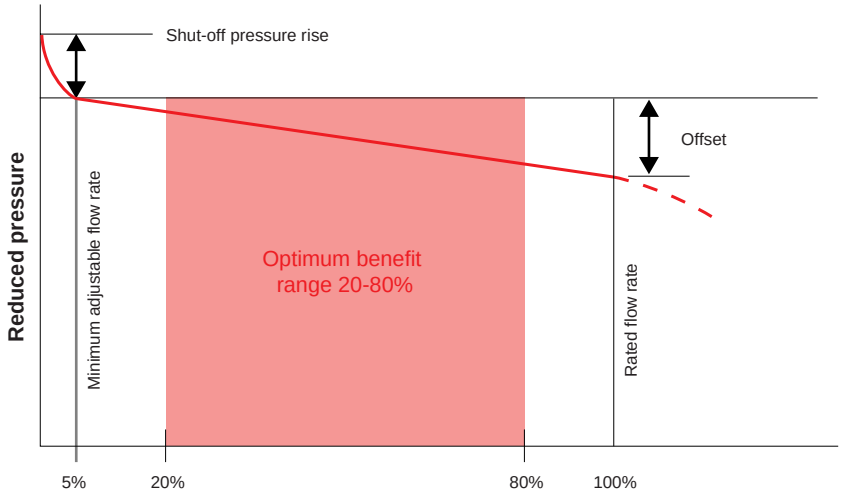

To select the appropriate nominal size, refer to the nominal size selection chart. When selecting the nominal size, an 80% to 90% safety factor of flow rate should be used, considering the heat loss and the pressure loss which occurs at the pressure reducing valve's front and back stop valves, the strainer, and etc.
Also, the pipe resistance should be considered when selecting the pipe size (avoid too small pipe).

There are 3 kinds of charts available regarding flow rate. Please find appropriate one for your usage.

1: Calculation formula (Page: 12)
2: Nominal size selection chart (Printed as a material for selection per product)
3: Flow rate table for GP-2000 (Page: 21) / GP-1000 (Page: 37) / GD-200 (Page: 48)

Sizing for Pressure Reducing Valve

Calculation Formula for Cv Value

〈For steam〉

When $P_2 > \frac{P_1}{2}$ $\quad Cv = \frac{Wk}{138\sqrt{\Delta P\,(P_1 + P_2)}}$

When $P_2 \leqq \frac{P_1}{2}$ $\quad Cv = \frac{Wk}{120P_1}$

〈For gas〉

When $P_2 > \frac{P_1}{2}$ $\quad Cv = \frac{Q}{2940}\sqrt{\frac{(273 + t)\,G}{\Delta P\,(P_1 + P_2)}}$

When $P_2 \leqq \frac{P_1}{2}$ $\quad Cv = \frac{Q\sqrt{(273 + t)\,G}}{2550P_1}$

〈For liquid〉 $\quad Cv = \frac{0.365V\sqrt{G}}{\sqrt{\Delta P}}$

W: Max. steam flow rate [kg/h]
P_1: Inlet pressure [MPa・A]
P_2: Outlet pressure [MPa・A]
ΔP: $P_1 - P_2$ [MPa]
k : 1 + 0.0013 × {superheated steam temp. [˚C]
− saturated steam temp. [˚C] }
Q : Max. gas flow rate [m³/h (standard condition)]
G : Specific gravity (relative to air for gas, or relative to water for liquid)
t : Fluid temperature [˚C]
V : Max. liquid flow rate [m³/h]
Cv: Cv value of each nominal size
Iv : Viscosity index
Mcst: Viscosity [cSt]

Formula for Correction of Viscosity

First, find viscosity index Iv.

$$Iv = \frac{72780}{Mcst}\left(\frac{\Delta P}{G}\right)^{\frac{1}{4}} V^{\frac{1}{2}}$$

Find K from calculated Iv on the viscosity correction curve.
The calculated maximum flow rate (V) devided by K is the value of the corrected flow rate.

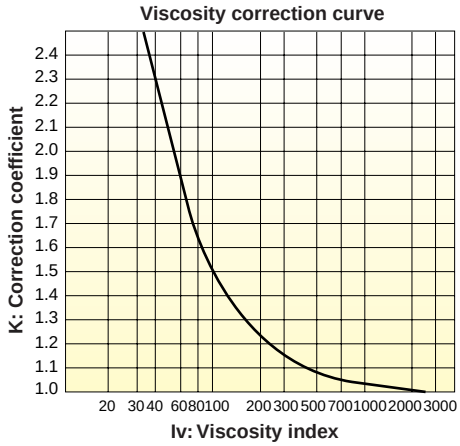

Corrected maximum flow rate: V' = V/K (m³/h)

Cv Value Table

Model \ Nominal size	6A	8A	10A	15A	20A	25A	32A	40A	50A	65A	80A	100A	125A	150A	200A	250A	300A
GP-2000 screwed GPK-2001・2003 screwed				5.0	7.2	10.9	14.3	18.8	32								
GP-2000 flanged・GP-2000CS GPK-2001・2003 flanged				5.0	7.2	10.9	14.3	18.8	32	60	78	120	(125)	(250)	(260)		
GDK-2000				5.0	7.2	10.9	14.3	18.8	32	60	78	120					
GP-1000 Series				1.0	2.3	4	6.5	9	16	25	36	64					
GP-27													100	144	256		
GD-6N			0.35	0.5	1.0	1.5											
GD-4					2	3	4	5	8	21	27	42	72	94			
GD-4B					2	3	4	5	8	12	16	24	36	48			
GD-400・400SS				1.5	2	3											
GD-6			0.35	0.5	1.0	1.5											
GD-7					2	3	6	8	15	23	30	40	50	60			
GD-7B					2	3	4	5	8	12	16	20	25	30			
GP-50													180	260	470	710	900
GD-8N	0.1	0.1	0.2	0.2													
GD-9		0.2	0.4	0.8	1.0	1.5											
GD-200・200C・200H				2.5	4	5	8	12	16	28	36	68	75	108			
GD-24GS・24GS-N				1.5	1.9	3	4	7	10								
GD-26-N・28-N・26G				2	2.3	3.5	6	7	11								
GD-27-N・29-N・27G						3.5	6	7	11	21	26	38					
GD-26S・28S・26GS					2.3	3.5	6	7	11								
GD-27S・29S・27GS					2.3	3.5	6	7	11	21	26	38					
GD-41・43・41G・43G				0.4	0.6	0.8											

・The above values in parentheses are the dimensions of the GP-2000 flanged.

Guidelines for Pressure Reducing Valve for Steam

Please refer to this guidelines and confirm the adequacy for the optimum use of the pressure reducing valves for steam.

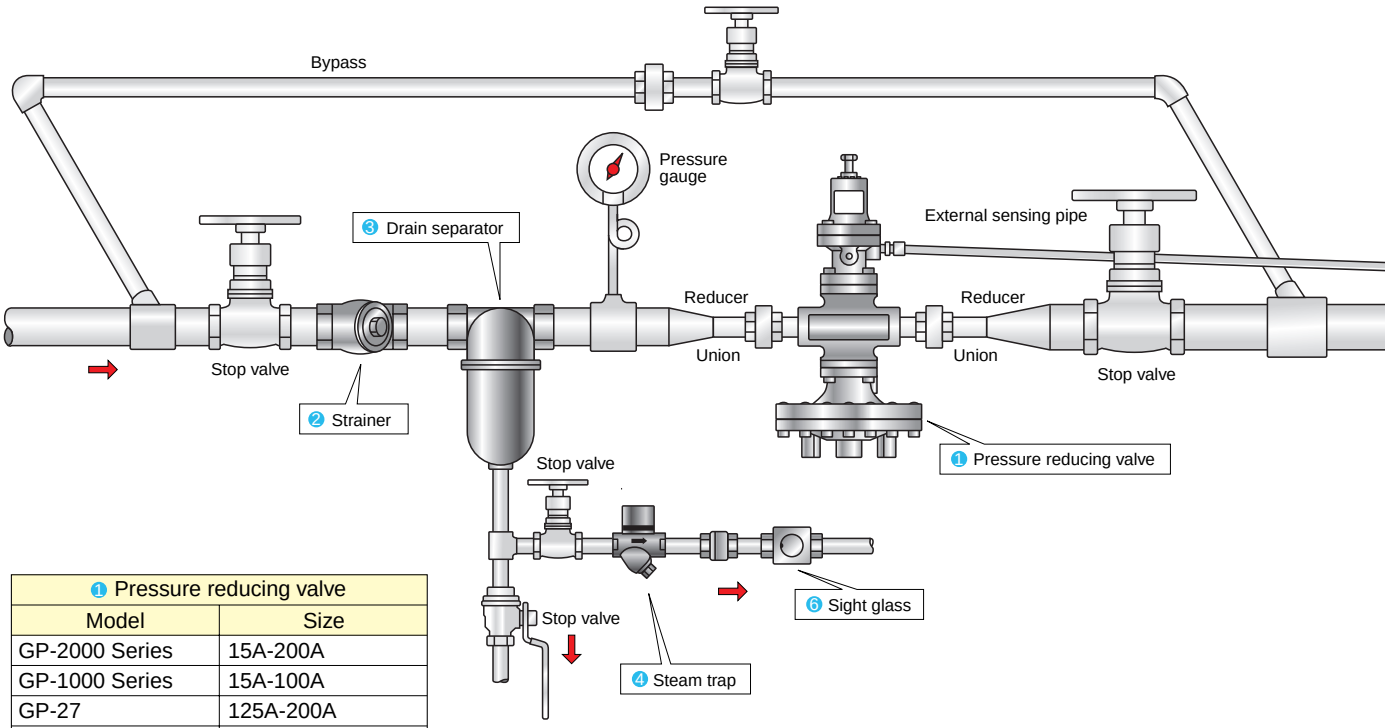

❶ Pressure reducing valve	
Model	Size
GP-2000 Series	15A-200A
GP-1000 Series	15A-100A
GP-27	125A-200A
GD-30・30S・45・45P	15A-25A
GD-6N	10A-25A

❷ Strainer

The strainer is installed in order to prevent the problems in the steam system attributable to scale. 80-100 mesh size is recommended for steam. Install it with its cap or cover for screen sideways so that the condensate accumulation is minimized.

	SY-5 FCD450 Screwed (10-50A) Max 2.0 MPa
	SY-40 FCD450 Flanged (15-300A) Max 1.0 MPa
	SY-17 SCS13 Screwed (15-50A) Max 2.0 MPa
	SY-8 SCS13 Screwed (15-150A) Max 1.0 MPa

❸ Drain separator

The drain separator efficiently separates condensate and assures that dry and clean steam is supplied to the system. It also separates scale and contributes in increasing the durability of the pressure reducing valve.

	DS-1 FCD450 Screwed (15-50A) Max 2.0 MPa
	DS-2 FCD450 Flanged (15-100A) Max 2.0 MPa

❹ Steam trap

The steam trap promptly discharges the condensate separated by the drain separator.

Disc type	**TSD-42** SCS2A Screwed (15-25A) Max 4.2 MPa
Disc type	**TD-10NA・30NA** FCD450 Screwed・Flanged (15-25A) Max 2.0 MPa

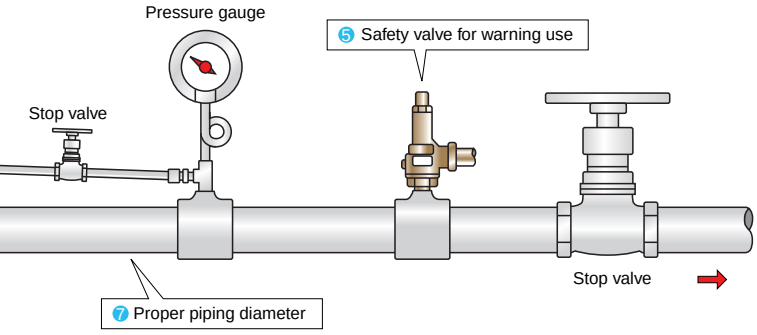

⚠ Precautions during installation

1: When installing solenoid valves or other devices which open and close abruptly, they should be installed in front of pressure reducing valve at a suitable distance (3 meters or more is adequate).
2: For external sensing type, reduced pressure sensing pipe should be installed at a point of minimum turbulence.
3: For two-stage pressure reducing systems, the distance between reducing valves should be at least 3 meters.
4: The nominal size should be usually larger than that of pressure reducing valve to prevent excessive flow velocities. The steam flow velocity should be 30 m/s or less.
5: Pressure reducing valve must be installed vertically to horizontal pipng.

❺ Safety valve for warning use

The safety valve for warning use is safety equipment that prevents troubles caused by abnormal increase in reduced pressure of the pressure reducing valve.

	AL-160 Lift type CAC406 Screwed (15-50A) For warning use
	AL-300 Lift type FCD450 Flanged (15-50A) For warning use
	AF-5 Full bore type CAC406 Screwed (20-50A) For protection of equipment

❻ Sight glass

With the sight glass, operation of the steam trap can be visually checked. When applied to the steam condensate, use the product with mica plate to protect the glass.

 SFM-1S	**SFM-1S** FCD450 Screwed (15-50A) Flap type
	SFM-1F FCD450 Flanged (15-50A) Flap type

❼ Proper piping diameter

One of the essentials for optimizing a steam line is to select a proper piping diameter. Stable pressure and flow rate are not assured without a correct size of piping even if the appropriate pressure reducing vale is selected.

Ex.) P_1 = 1.0 MPa P_2 = 0.1 MPa Steam flow rate 250 kg/h
Inlet piping diameter : 25A
Pressure reducing valve: Model GP-2000 15A
Outlet piping diameter : 50A

Steam Flow Rate Table
(Saturated steam, Flow velocity 30 m/s, Carbon steel pipe) (kg/h)

Nominal size / Pressure MPa	15A	20A	25A	32A	40A	50A
0.05	18	33	55	92	125	202
0.1	24	44	72	120	164	265
0.2	35	64	105	176	240	388
0.3	47	84	138	231	314	508
0.4	58	104	170	285	387	627
0.5	69	124	202	339	460	745
0.6	79	143	234	392	533	862
0.7	90	163	266	445	605	978
0.8	101	182	297	498	676	1094
0.9	112	201	329	551	748	1209
1.0	122	220	360	603	819	1325

See page 336 " Flow Velocity Table for Steam inside the Pipe."

●Set pressure of safety valve for alarm use at the outlet side of the pressure reducing valve for steam

Set pressure of pressure reducing valve (MPa)	Set pressure of safety valve (MPa)
0.1 or less	Set pressure of the pressure reducing valve + 0.05 or more
0.11-0.4	Set pressure of the pressure reducing valve + 0.08 or more
0.41-0.6	Set pressure of the pressure reducing valve + 0.1 or more
0.61-0.8	Set pressure of the pressure reducing valve + 0.12 or more
More than 0.8	Set pressure of the pressure reducing valve + 15%

・When a safety valve is installed for alarm use at the outlet side of a pressure reducing valve for steam and there are no laws or regulations specified to comply with, select a safety valve whose blowout capacity is around 10% of the maximum flow rate of the pressure reducing valve.

Guidelines for Pressure Reducing Valve for Air/Gas

Please refer to this guidelines and confirm the adequacy for the optimum use of the pressure reducing valves for air/gas.

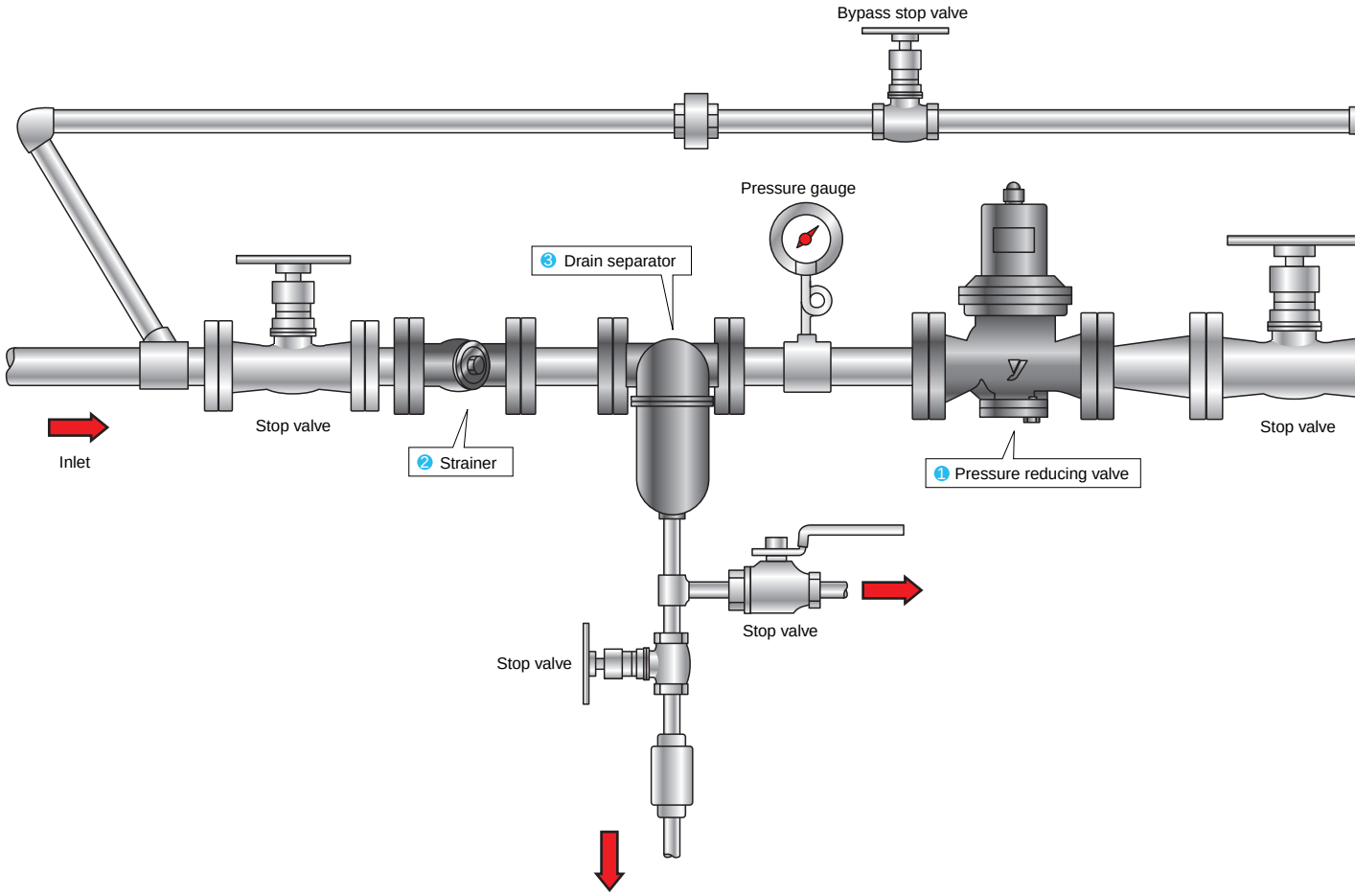

❶ Pressure reducing valve	
Model	Size
GP-1000T Series	15A-100A
GD-26G Series	15A-50A
GD-6	10A-25A
GD-41G・43G	15A-25A
GD-400・400SS	15A-25A
GD-4・4B	20A-150A
GD-8N	6A-15A
GD-9	8A-25A

❷ Strainer

The strainer is installed to prevent troubles in the air/gas system attributable to scale. The mesh size of 60 or more is recommended. Install it with its cap or cover for screen sideways as shown in the figure so that the drain accumulation is minimized.

	SY-5 FCD450 Screwed (10-50A) Max 2.0 MPa
	SY-40 FCD450 Flanged (15-300A) Max 1.0 MPa
	SY-17 SCS13 Screwed (15-50A) Max 2.0 MPa
	SY-8 SCS13 Screwed (15-150A) Max 1.0 MPa

❸ Drain separator

The drain separator efficiently separates drain and assures that dry and clean air/gas is supplied to the system.
It also separates scale and contributes in increasing the durability of the pressure reducing valve.

	DS-1 FCD450 Screwed (15-50A) Max 2.0 MPa
	DS-2 FCD450 Flanged (15-100A) Max 2.0 MPa

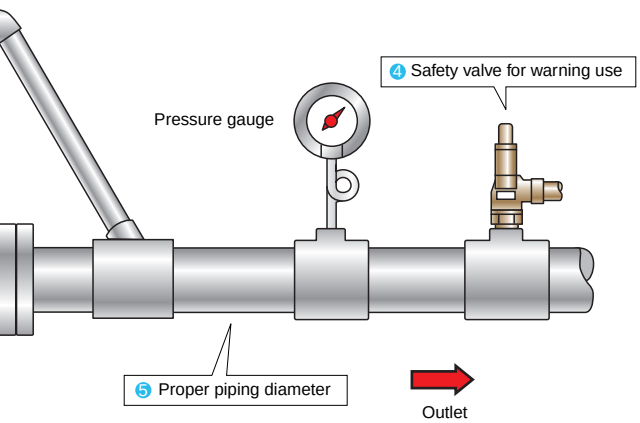

- Please contact us for the application of each model because it may require material change or confirmation of applicable fluids.

Applicable special fluids
Nitrogen
Argon
Propane
City gas
Ozone
Methane
COG gas
LNG
LPG
Oxygen
Carbon dioxide gas
Naphthalene
Xylene
Methyl isobutyl ketone
etc

④ Safety valve for warning use

The safety valve for warning use is safety equipment that prevents troubles caused by the abnormal increase in reduced pressure of the pressure reducing valve.

	AL-150T Lift type CAC406 Screwed (15-50A) For warning use
	AL-300T Lift type FCD450 Flanged (15-50A) For warning use

⑤ Proper piping diameter

One of the essentials for optimizing an air/gas line is to select a proper piping diameter. Stable pressure and flow rate are not assured without a correct size of piping even if the appropriate pressure reducing vale is selected.

Ex.) P_1 = 0.7 MPa P_2 = 0.1 MPa Air flow rate 250 kg/h
Inlet piping diameter : 25A
Pressure reducing valve: Model GD-26G 20A
Outlet piping diameter : 50A

Air Flow Rate Table
(Flow velocity 15 m/s, t = 20˚C, Carbon steel pipe) (kg/h)

Nominal size / Pressure MPa	15A	20A	25A	32A	40A	50A
0.1	26	47	77	129	175	283
0.2	39	70	115	193	263	425
0.3	52	94	154	258	350	567
0.4	65	118	192	322	438	708
0.5	78	141	231	387	526	850
0.6	91	165	270	451	613	992
0.7	105	189	308	516	701	1134
0.8	118	212	347	581	789	1275
0.9	131	236	385	645	876	1417
1.0	144	260	424	710	964	1559

See page 337 “ Flow Velocity Table for Air inside the Pipe.”

Guidelines for Pressure Reducing Valve for Liquid

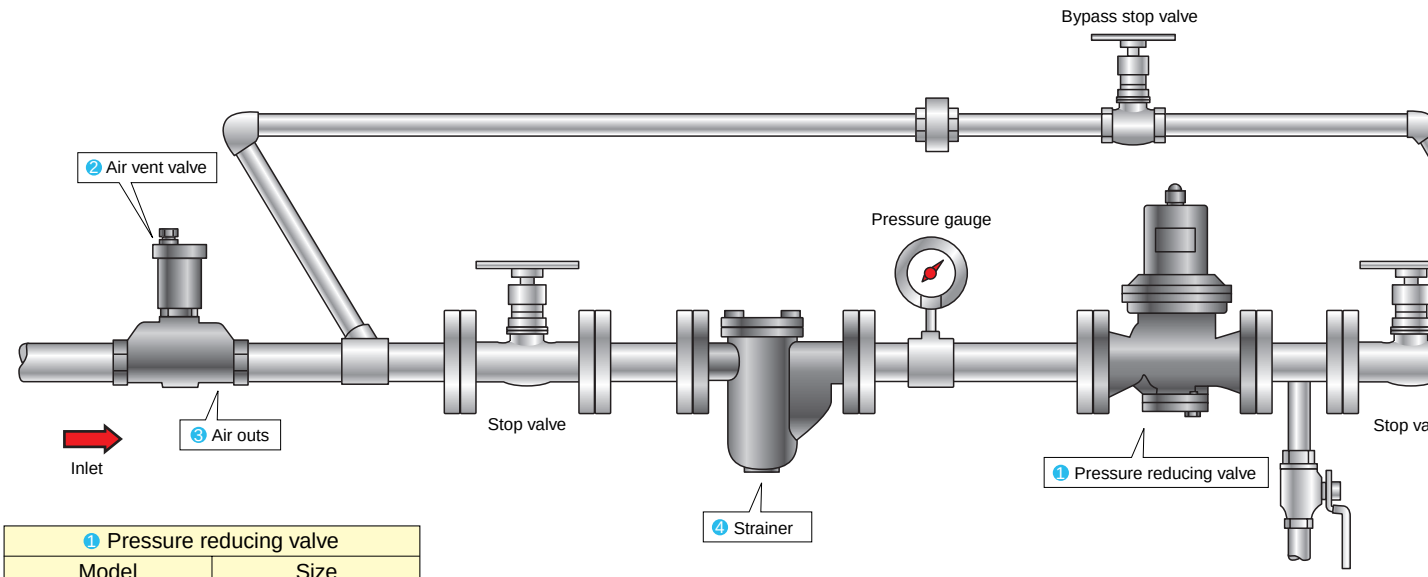

❶ Pressure reducing valve	
Model	Size
GD-200 Series	15A-150A
GD-26 Series	15A-150A
GD-24	15A-50A
GD-25 Series	25A
GD-38 Series	20A
GD-46 Series	20A
GD-15C	15A-25A
GD-41・43	15A-25A
GD-6	10A-25A
GD-7・7B	20A-150A
GD-8N	6A-15A
GP-50	125A-300A

❷ Air vent valve

The air in the piping system causes noise and unstable pressure. The air vent valve is installed to effectively discharge the air in the system.

	TA-3 FCD450 (Electrodeposition coating) Screwed (15-32A) Max. 1.0 MPa
	TA-16 SCS13 Screwed (15-25A) Product complying with the Water Works Law

❸ Air out

The air out is used to continuously separate the air from the liquid.

	AO-2 CAC406 Screwed (20-50A) Max. 1.0 MPa

❹ Strainer

The strainer is installed to prevent troubles caused by scale.
The mesh size of 60 or more is recommended for a cold/hot water line.

	SU-20 FCD450 Basket strainer Flanged (20-150A)
	SY-6 CAC406 Y-type strainer Screwed (15-50A)
	SW-10 FCD450 Duplex strainer Flanged (20-100A)

❺ Safety valve (Relief valve)

The safety valve is a safety equipment to prevent troubles caused by abnormal increase in reduced pressure of the pressure reducing valve.

	AL-150T CAC406 Lift type Screwed (15-50A)
	AL-300T FCD450 Lift type Flanged (15-50A)
	AL-260R CAC406 Pump relief valve Screwed (15-50A)

- Please contact us for the application of each model because it may require material change or confirmation of applicable fluids.

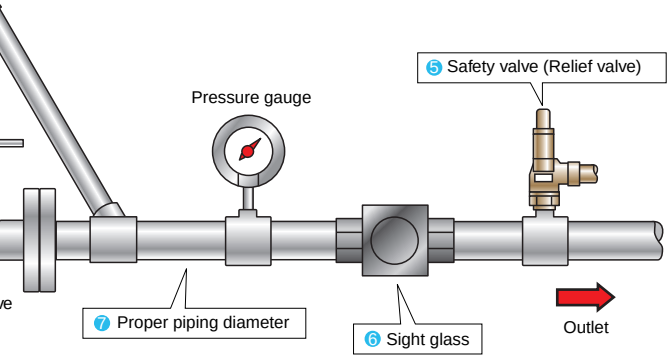

Applicable special fluids
Heavy oil A
Heavy oil B
Kerosene
Ethyl alcohol
Methanol
Toluene
Hexane
Heptane
etc

6 Sight glass	
With the sight glass, the flow can be visually checked.	
	SB-1S FCD450 Screwed (15-50A) Ball type
	SF-1S FCD450 Screwed (15-50A) Flap type
	150L-13F SCS13 Flanged (15-100A) Plain type

7 Proper piping diameter

Cold/hot water is an incompressible fluid and it does not change in the volume by the change in pressure. The proper piping diameter is recommended to be determined at the flow velocity of 1-3 m/s.
Serious problems such as water hammer may occur if the flow velocity is too high.

Water Flow Rate Table (Carbon steel pipe) (m^3/h)

Nominal size / Flow velocity (m/s)	15A	20A	25A	32A	40A	50A
1.0	0.73	1.32	2.15	3.60	4.89	7.91
1.2	0.88	1.58	2.58	4.32	5.87	9.49
1.4	1.03	1.85	3.01	5.04	6.85	11.07
1.6	1.17	2.11	3.44	5.76	7.82	12.65
1.8	1.32	2.37	3.87	6.48	8.80	14.23
2.0	1.47	2.64	4.31	7.20	9.78	15.82
2.5	1.83	3.30	5.38	9.00	12.23	19.77
3.0	2.20	3.96	6.46	10.81	14.67	23.72

See page 337 “ Flow Velocity Table for Water inside the Pipe.”

GP-2000

Features

1. Large-size diaphragm and external sensing method control reduced pressure more stably.
2. Since the Cv value is high, flow capability and control capability are significantly improved, one or two sizes smaller than the regular nominal size can be applied.
3. Spherical main valve offers great sealability and great reduction of valve seat leakage (compliant with ANSI Class IV).
4. Pressure management at low pressure (0.02 MPa or less) is possible.

Screwed type

Flanged type

Specifications

Model		GP-2000		
Application		Steam		
Reduced pressure sensing method		External sensing *1		
Inlet pressure		0.1-2.0 MPa		0.1-1.0 MPa
Reduced pressure		0.02-0.15 MPa 0.1-1.4 MPa *2		0.02-0.15 MPa 0.1-0.85 MPa *2
		85% or less of inlet pressure (gauge pressure)		
Minimum differential pressure		0.05 MPa		
Maximum pressure reduction ratio		20:1		
Maximum temperature		220˚C		
Valve seat leakage		0.01% or less of rated flow		
Material	Body	Ductile cast iron		
	Main valve	Stainless steel		
	Valve seat	Stainless steel		
	Pilot valve	Stainless steel		
	Pilot valve seat	Stainless steel		
	Diaphragm	Stainless steel		
Reduced pressure sensing pipe		Copper pipe ϕ 8-2 m		
Connection		JIS Rc screwed	JIS 20K RF flanged	JIS 10K FF flanged

*1 External sensing is standard. Available with internal sensing type (nominal size: 15A to 100A) in different specifications. Note that Cv value of internal sensing type is lower than that of external sensing type.

*2 Available with the GP-2000L, reduced pressure of 0.01 to 0.02 MPa, from 15A to 100A, inlet pressure of 0.1 to 0.5 MPa and maximum pressure reduction of 50:1.

・Available with external pilot type.

・Available with ASME or EN flanged.

Dimensions (mm) and Weights (kg)

●Screwed type

Nominal size	d	L	H_1	H	A	Weight
15A	Rc 1/2	150	170	398	200	14.0
20A	Rc 3/4	150	170	398	200	14.0
25A	Rc 1	160	175	404	226	18.5
32A	Rc 1-1/4	180	192	434	226	21.5
40A	Rc 1-1/2	180	192	434	226	21.5
50A	Rc 2	230	216	498	276	33.0

・Available with NPT connection.

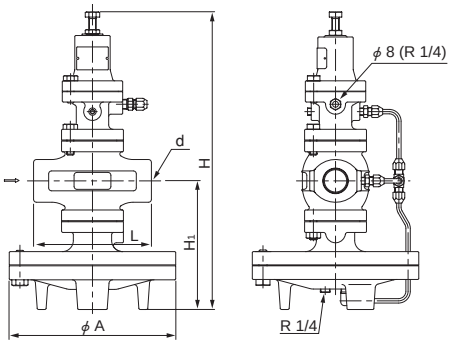

●Flanged type (JIS 20K RF)

Nominal size	L	H_1	H	A	Weight
15A	146 (142)	170	398	200	15.5 (15.3)
20A	146 (142)	170	398	200	16.0 (15.8)
25A	156 (152)	175	404	226	21.0 (20.6)
32A	176 (172)	192	434	226	24.0 (23.6)
40A	196 (192)	192	434	226	24.5 (24.1)
50A	222 (218)	216	498	276	36.0 (35.8)
65A	282 (278)	251	552	352	64.5 (64.2)
80A	302 (294)	264	575	352	71.5 (68.8)
100A	342 (330)	321	658	401	111.0 (106.9)
125A	400 (388)	321	658	401	115.0 (112.0)
150A	465 (453)	414	814	502	234.3 (230.0)
200A	469 (469)	414	814	502	242.0 (238.0)

・The above values in parentheses are the dimensions of JIS 10K FF flanged.

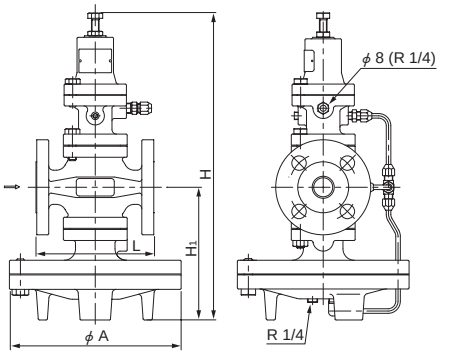

Nominal Sizes Selection Chart (For Steam/External Sensing)

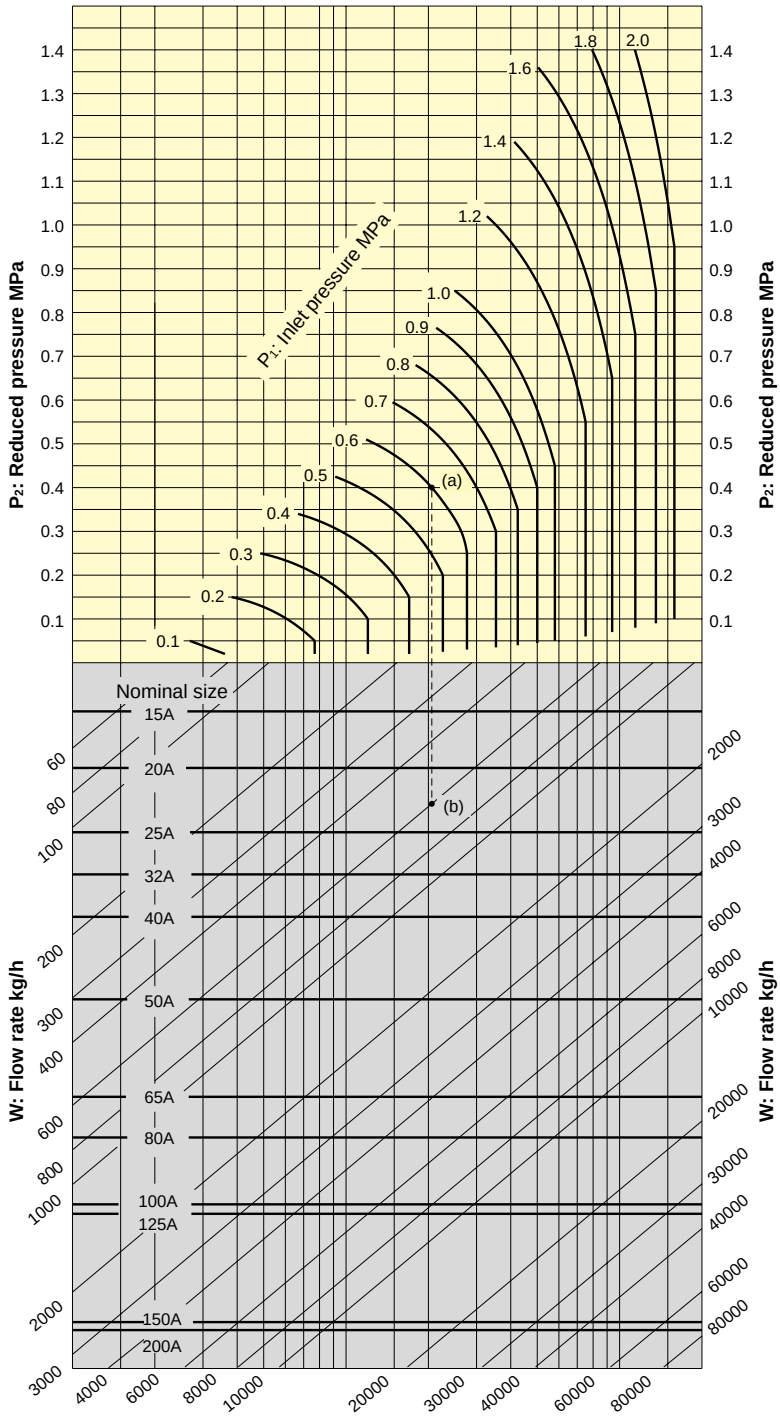

[Example]
When selecting the nominal size of a pressure reducing valve whose inlet pressure (P_1), reduced pressure (P_2), and flow rate are 0.6 MPa, 0.4 MPa, and 600 kg/h, respectively, first find intersection point (a) of the inlet pressure of 0.6 MPa and the reduced pressure of 0.4 MPa. Trace down vertically from this intersection point to find intersection point (b) with the flow rate of 600 kg/h. Since intersection point (b) lies between nominal sizes 20A and 25A, select the larger one, 25A.

・Set the safety factor at 80 to 90%.

Specifications Selection Chart

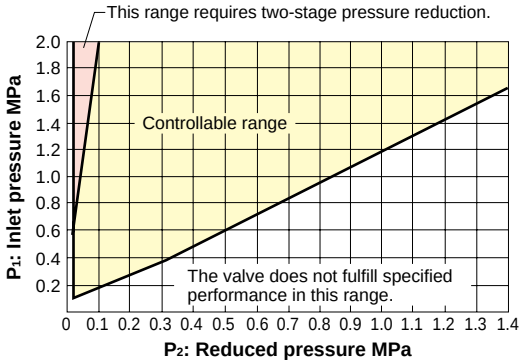

Flow Characteristic Chart

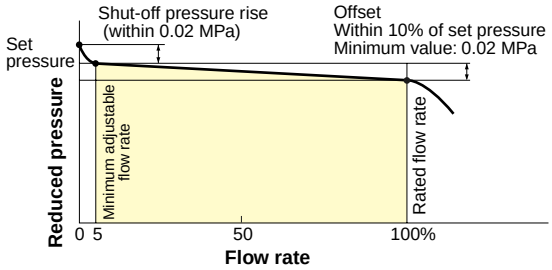

Pressure Characteristic Chart

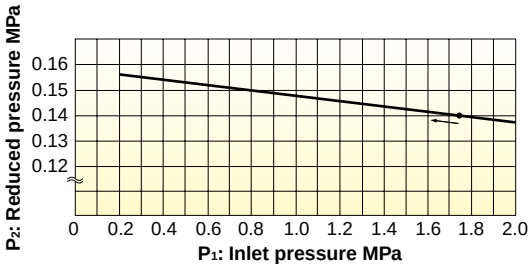

This chart shows a variation in the reduced pressure when the inlet pressure of 1.75 MPa is changed between the range from 0.2 MPa to 2.0 MPa with the reduced pressure set at 0.14 MPa.

GP-2000 Flow Rate Table

(kg/h)

P_1 (MPa)	P_2 (MPa)	15A	20A	25A	32A	40A	50A	65A	80A	100A	125A	150A	200A
2.0	0.1-0.9	1,260	1,814	2,746	3,603	4,737	8,064	15,120	19,656	30,240	31,500	63,000	65,520
	1	1,232	1,775	2,687	3,525	4,634	7,889	14,792	19,230	29,584	30,817	61,635	64,100
	1.2	1,136	1,636	2,477	3,250	4,273	7,273	13,637	17,729	27,275	28,412	56,824	59,097
	1.4	1,012	1,458	2,207	2,896	3,808	6,481	12,153	15,799	24,306	25,319	50,638	52,664
1.8	0.1-0.8	1,140	1,641	2,485	3,260	4,286	7,296	13,680	17,784	27,360	28,500	57,000	59,280
	0.9	1,113	1,603	2,426	3,183	4,185	7,125	13,359	17,367	26,718	27,832	55,664	57,890
	1	1,067	1,537	2,327	3,053	4,014	6,832	12,810	16,653	25,621	26,688	53,377	55,512
	1.2	954	1,374	2,081	2,730	3,590	6,111	11,458	14,895	22,916	23,871	47,742	49,652
	1.4	803	1,157	1,751	2,298	3,021	5,143	9,643	12,536	19,287	20,090	40,181	41,788
1.6	0.1-0.7	1,020	1,468	2,223	2,917	3,835	6,528	12,240	15,912	24,480	25,500	51,000	53,040
	1	893	1,286	1,947	2,554	3,358	5,716	10,718	13,933	21,436	22,329	44,659	46,445
	1.3	664	956	1,448	1,900	2,498	4,253	7,974	10,366	15,949	16,613	33,227	34,556
1.4	0.1-0.6	900	1,296	1,962	2,574	3,384	5,760	10,800	14,040	21,600	22,500	45,000	46,800
	1	702	1,011	1,531	2,009	2,642	4,497	8,433	10,962	16,866	17,568	35,137	36,543
	1.1	620	893	1,352	1,773	2,331	3,969	7,442	9,675	14,884	15,504	31,009	32,250
1.2	0.1-0.5	780	1,123	1,700	2,230	2,932	4,992	9,360	12,168	18,720	19,500	39,000	40,560
	1	477	687	1,040	1,365	1,795	3,055	5,729	7,447	11,458	11,935	23,871	24,826
1.0	0.1-0.4	660	950	1,438	1,887	2,481	4,224	7,920	10,296	15,840	16,500	33,000	34,320
	0.5	635	914	1,385	1,817	2,388	4,066	7,623	9,911	15,247	15,883	31,766	33,036
	0.8	435	627	950	1,246	1,638	2,789	5,229	6,798	10,459	10,895	21,791	22,663
0.9	0.1-0.4	600	864	1,308	1,716	2,256	3,840	7,200	9,360	14,400	15,000	30,000	31,200
	0.5	551	793	1,201	1,576	2,072	3,528	6,615	8,600	13,230	13,782	27,564	28,666
	0.7	413	595	901	1,182	1,554	2,646	4,961	6,450	9,923	10,336	20,673	21,500
0.8	0.1-0.3	540	777	1,177	1,544	2,030	3,456	6,480	8,424	12,960	13,500	27,000	28,080
	0.5	462	665	1,007	1,322	1,738	2,958	5,547	7,211	11,094	11,556	23,113	24,037
0.7	0.1-0.3	480	691	1,046	1,372	1,804	3,072	5,760	7,488	11,520	12,000	24,000	24,960
	0.5	364	525	794	1,042	1,371	2,333	4,375	5,688	8,751	9,115	18,231	18,961
0.6	0.1-0.2	420	604	915	1,201	1,579	2,688	5,040	6,552	10,080	10,500	21,000	21,840
	0.3	395	570	862	1,132	1,488	2,533	4,750	6,175	9,500	9,896	19,793	20,584
	0.5	248	357	541	710	934	1,590	2,981	3,875	5,963	6,211	12,423	12,919
0.5	0.1-0.2	360	518	784	1,029	1,353	2,304	4,320	5,616	8,640	9,000	18,000	18,720
	0.3	308	443	671	881	1,158	1,972	3,698	4,807	7,396	7,704	15,408	16,025
	0.4	228	329	498	653	859	1,462	2,742	3,565	5,485	5,713	11,427	11,884
0.4	0.05-0.15	300	432	654	858	1,128	1,920	3,600	4,680	7,200	7,500	15,000	15,600
	0.3	206	297	450	591	777	1,323	2,480	3,225	4,961	5,168	10,336	10,750
0.3	0.05-0.1	240	345	523	686	902	1,536	2,880	3,744	5,760	6,000	12,000	12480
	0.2	182	262	397	521	685	1,166	2,187	2,844	4,375	4,557	9,115	9,480
0.2	0.05	180	259	392	515	677	1,152	2,160	2,808	4,320	4,500	9,000	9,360
	0.1	154	221	335	440	579	986	1,849	2,403	3,698	3,852	7,704	8,012
0.1	0.05	91	131	198	260	342	583	1,093	1,422	2,187	2,278	4,557	4,740

GPK-2001・2003

Features

1. Superior to piston type valve in capacity and performance. Very effective in controlling inlet pressure and flow rate fluctuations.
2. Spherical main valve offers great sealability and great reduction of valve seat leakage (compliant with ANSI Class IV).
3. Remote control makes pressure adjustment easy, and the pressure setting is wide.
4. The GPK-2001 and GPK-2003 can be selected according to the loading air pressure.

GPK-2001 screwed type

GPK-2003 flanged type

Specifications

Model		GPK-2001	GPK-2003
Application		Steam	
Reduced pressure sensing method		External sensing *	
Inlet pressure	JIS Rc JIS 20K RF	0.1-2.0 MPa	0.25-2.0 MPa
	JIS 10K FF	0.1-1.0 MPa	0.25-1.0 MPa
Reduced pressure		0.05-0.9 MPa (0.85 MPa for JIS 10K)	0.2-1.4 MPa (0.85 MPa for JIS 10K)
		85% or less of inlet pressure (gauge pressure)	
Loading air pressure		Refer to the loading air pressure-set pressure chart.	
Minimum differential pressure		0.05 MPa	
Maximum pressure reduction ratio		20:1	10:1
Maximum temperature		220˚C	
Valve seat leakage		0.01% or less of rated flow	
Material	Body	Ductile cast iron	
	Main valve	Stainless steel	
	Valve seat	Stainless steel	
	Pilot valve	Stainless steel	
	Pilot valve seat	Stainless steel	
	Diaphragm	Stainless steel	
Reduced pressure detection pipe		Copper pipe ϕ 8-2 m	
Connection		JIS Rc screwed JIS 20K RF and 10K FF flanged	

* External sensing is standard. Available with internal sensing type in different specifications. Note that the Cv value of internal sensing type is lower than that of external sensing type.
・Available with ASME or EN flanged.

Piping Example

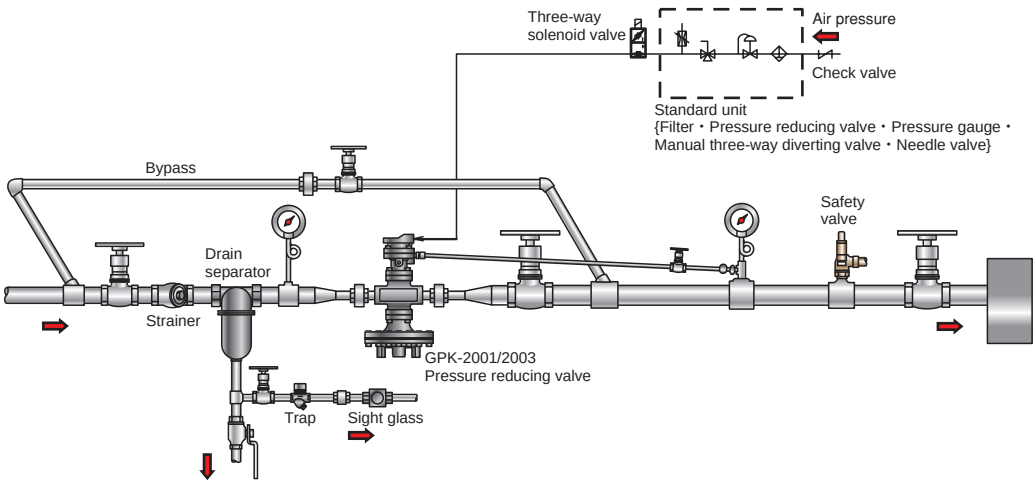

Dimensions (mm) and Weights (kg)

●GPK-2001 screwed type

Nominal size	d	L	H1	H	A	Weight
15A	Rc 1/2	150	170	335	200	14.0
20A	Rc 3/4	150	170	335	200	14.0
25A	Rc 1	160	175	341	226	18.5
32A	Rc 1-1/4	180	192	371	226	21.5
40A	Rc 1-1/2	180	192	371	226	21.5
50A	Rc 2	230	216	435	276	33.0

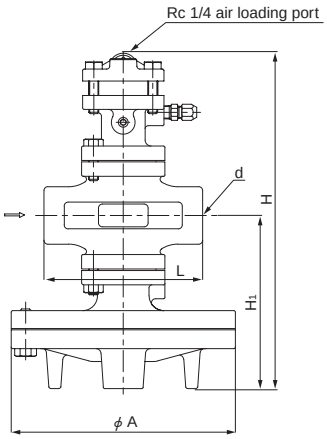

●GPK-2001 flanged type (JIS 20K RF)

Nominal size	L	H1	H	A	Weight
15A	146 (142)	170	335	200	15.5 (15.3)
20A	146 (142)	170	335	200	16.0 (15.8)
25A	156 (152)	175	341	226	21.0 (20.6)
32A	176 (172)	192	371	226	24.0 (23.4)
40A	196 (192)	192	371	226	24.5 (24.1)
50A	222 (218)	216	435	276	36.0 (35.8)
65A	282 (278)	251	489	352	64.5 (64.2)
80A	302 (294)	264	512	352	71.5 (69.3)
100A	342 (330)	321	595	401	111.0 (107.4)

・The above values in parentheses are the dimensions and weights of JIS 10K FF flanged.

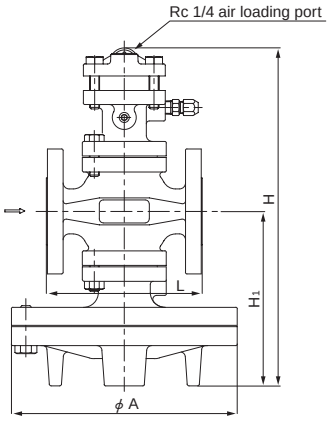

●GPK-2003 screwed type

Nominal size	d	L	H1	H	A	Weight
15A	Rc 1/2	150	170	353	200	17.5
20A	Rc 3/4	150	170	353	200	17.5
25A	Rc 1	160	175	359	226	22.0
32A	Rc 1-1/4	180	192	389	226	25.0
40A	Rc 1-1/2	180	192	389	226	25.0
50A	Rc 2	230	216	453	276	36.5

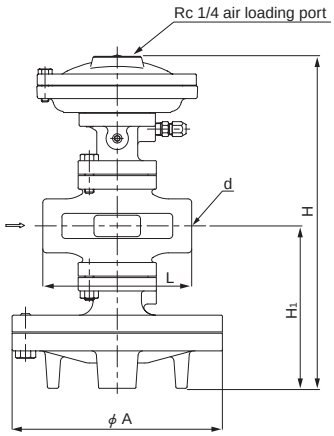

●GPK-2003 flanged type (JIS 20K RF)

Nominal size	L	H1	H	A	Weight
15A	146 (142)	170	353	200	19.0 (18.8)
20A	146 (142)	170	353	200	19.5 (19.3)
25A	156 (152)	175	359	226	24.5 (24.1)
32A	176 (172)	192	389	226	27.5 (27.1)
40A	196 (192)	192	389	226	28.0 (27.6)
50A	222 (218)	216	453	276	39.5 (39.3)
65A	282 (278)	251	507	352	68.0 (67.7)
80A	302 (294)	264	530	352	75.0 (72.8)
100A	342 (330)	321	613	401	114.5 (113.9)

・The above values in parentheses are the dimensions and weights of JIS 10K FF flanged.

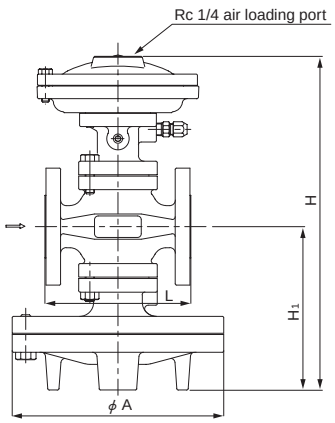

GDK-2000

Features

1. Due to direct acting type the actuating parts are fewer and structure is simple but robust.
2. Spherical main valve offers great sealability and great reduction of valve seat leakage (compliant with ANSI Class IV).
3. Large-size diaphragm ensures high Cv value and distinguished controllability against load fluctuations.
4. Remote operation makes pressure adjustment easy, and the pressure setting is wide.

Flanged type

Specifications

Model		GDK-2000		
Application		Steam		
Reduced pressure sensing method		External sensing		
Inlet pressure		0.1-2.0 MPa		0.1-1.0 MPa
Reduced pressure		0.05-1.4 MPa		0.05-0.9 MPa
		90% or less of inlet pressure (gauge pressure)		
Operation air pressure		Refer to the loading air pressure-set pressure chart.		
Minimum differential pressure		0.05 MPa		
Maximum pressure reduction ratio		10:1		
Maximum temperature		220˚C		
Valve seat leakage		0.01% or less of rated flow		
Material	Body	Ductile cast iron		
	Valve	Stainless steel		
	Valve seat	Stainless steel		
	Diaphragm	Stainless steel		
Reduced pressure sensing pipe		Copper pipe ϕ 8-2 m		
Connection		JIS Rc screwed	JIS 20K RF flanged	JIS 10K FF flanged

・Available with ASME or EN flanged.

Dimensions (mm) and Weights (kg)

●Screwed type

Nominal size	d	L	H_1	H	A	Weight
15A	Rc 1/2	150	74	244	200	12.4
20A	Rc 3/4	150	74	244	200	12.4
25A	Rc 1	160	76	251	226	16.4
32A	Rc 1-1/4	180	90	282	226	19.9
40A	Rc 1-1/2	180	90	282	226	19.9
50A	Rc 2	230	103	319	276	30.5

●Flanged type

Nominal size	L	H_1	H	A	Weight
15A	146 (142)	74	244	200	13.9 (13.7)
20A	146 (142)	74	244	200	14.4 (14.2)
25A	156 (152)	76	251	226	19.2 (18.8)
32A	176 (172)	90	282	226	22.4 (22.0)
40A	196 (192)	90	282	226	22.9 (22.5)
50A	222 (218)	103	319	276	33.5 (33.5)
65A	282 (278)	122	373	352	61.8 (61.5)
80A	302 (294)	135	399	352	69.1 (66.9)
100A	342 (330)	167	488	401	108.6 (105.0)

・The above values in parentheses are the dimensions and weights of JIS 10K FF flanged.

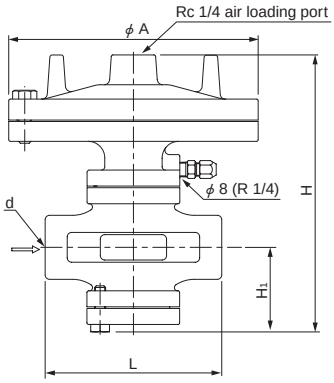

Screwed type

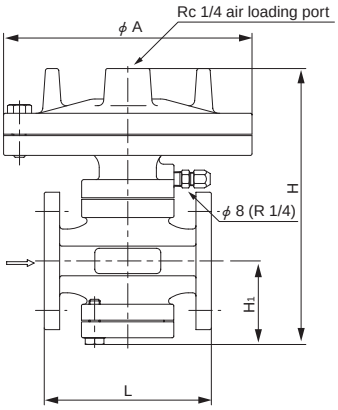

Flanged type

Specifications Selection Chart

●GPK-2001・2003

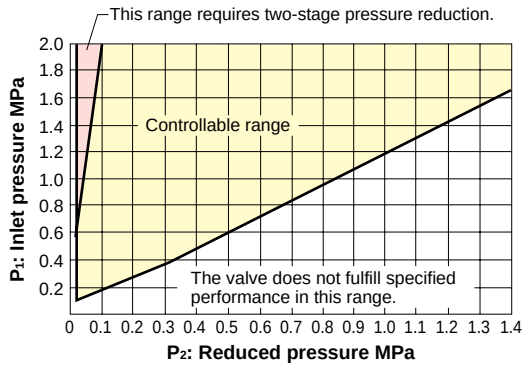

●GDK-2000

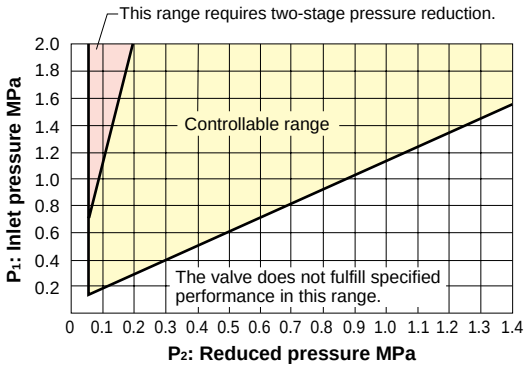

Flow Characteristic Chart

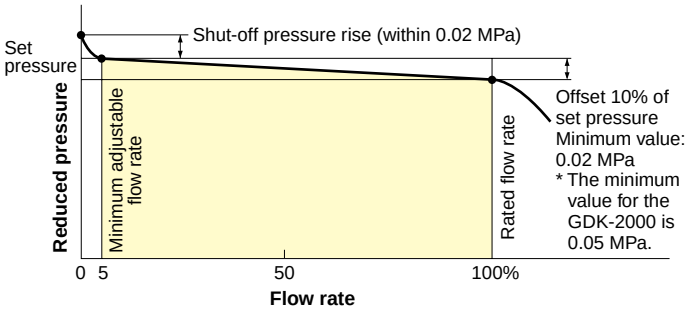

Loading Air Pressure-set Pressure Chart

●GPK-2001・2003

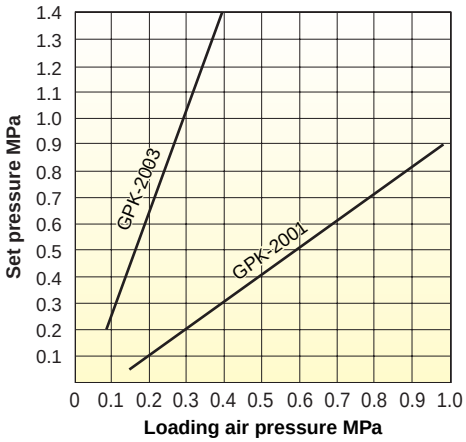

Basically, the set pressure to the loading air pressure is as shown in the chart above. The set pressure is slightly different depending on the working conditions. For the actual use, adjust loading air pressure suitable for the necessary set pressure.

●GDK-2000

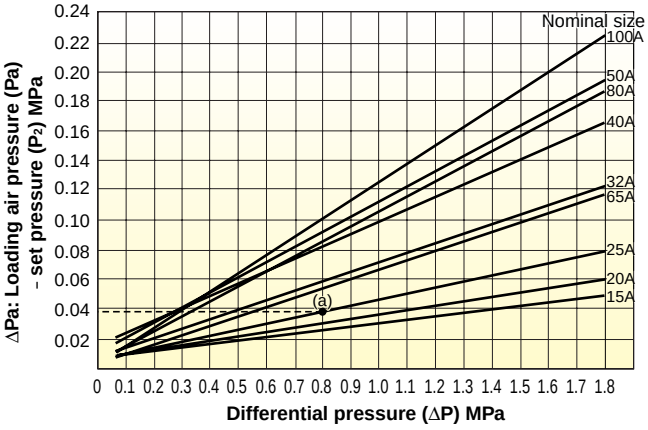

How to read the chart (GDK-2000)

When the nominal size is 25A, the inlet pressure (P_1) is 1.0 MPa, and the reduced pressure (P_2) is 0.2 MPa, the loading air pressure is calculated as follows: Trace up vertically from the differential pressure (ΔP) before and after the pressure reducing valve (1.0 MPa − 0.2 MPa = 0.8 MPa) to find intersection point (a) with the nominal size of 25A. Calculate ΔPa [loading air pressure (Pa) − set pressure (P_2)] = 0.037 MPa by horizontally tracing to the left from intersection point (a). Thus, the loading air pressure is: (Pa) = ΔPa + P_2 = 0.037 + 0.2 = 0.237 MPa.

Pressure Characteristic Chart

●GPK-2001・2003

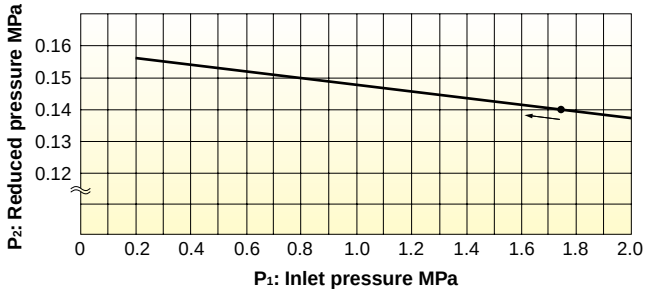

This chart shows variation in reduced pressure when the inlet pressure of 1.75 MPa is changed between 0.3 MPa and 1.0 MPa while the reduced pressure is set at 0.14 MPa.

●GDK-2000

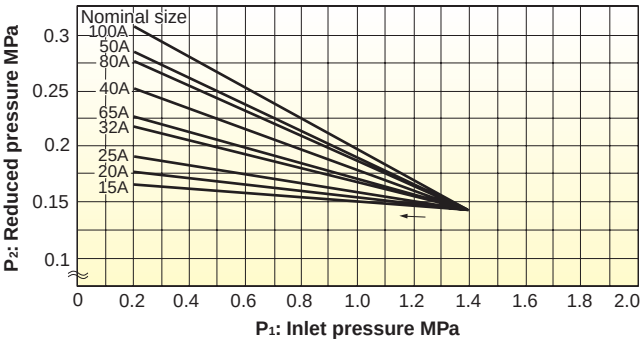

This chart shows variation in reduced pressure when the inlet pressure of 1.4 MPa is changed between 0.2 MPa and 1.4 MPa while the reduced pressure is set at 0.14 MPa.

CP-2000 Series 〈combination valve〉

Need to use pressure reducing valves, solenoid valves, temperature regulators or its combination for a specific purpose, with large space and great cost for installation . . . Have you ever imagined that it may be helpful if a single valve combines such functions? Yoshitake CP-2000 Series integrates such functions into a single valve to realize space reduction, cost saving and controllability of plural valves without efforts.

Reliable ON-OFF system by the CP-2001

■CP-2001

Steam is usually supplied only when required. This means that steam is controlled as a batch (intermittent) system. Steam ON/OFF is switched by solenoid valve, however, rapid opening/closing operation of solenoid valve causes various problems to other devices such as pressure reducing valve. To solve such problems, we recommend CP-2001.

〔Control example〕

Solenoid valve ON	P_1 = 1.0 MPa P_2 = 0.2 MPa
Solenoid valve OFF	P_1 = 1.0 MPa P_2 = 0 MPa

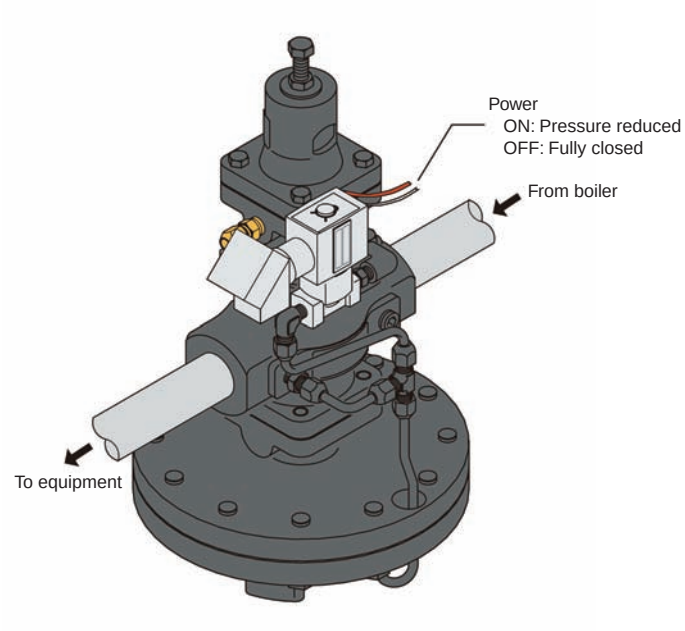

Quicker startup feasible with the CP-2003

■CP-2003

In order to increase the performance and efficiency of the system and to save energy, a high-pressure steam line and a low-pressure steam line are used together. For this purpose two or more pressure valves have been used. Air is discharged with low-pressure steam and then rapidly raised to the intended temperature with high-pressure steam, and regular operation begins with low-pressure steam.
Our CP-2003 can perform these operations alone.

〔Control example〕

Solenoid valve ON	P_1 = 1.0 MPa P_2 = 0.5 MPa
Solenoid valve OFF	P_1 = 1.0 MPa P_2 = 0.2 MPa

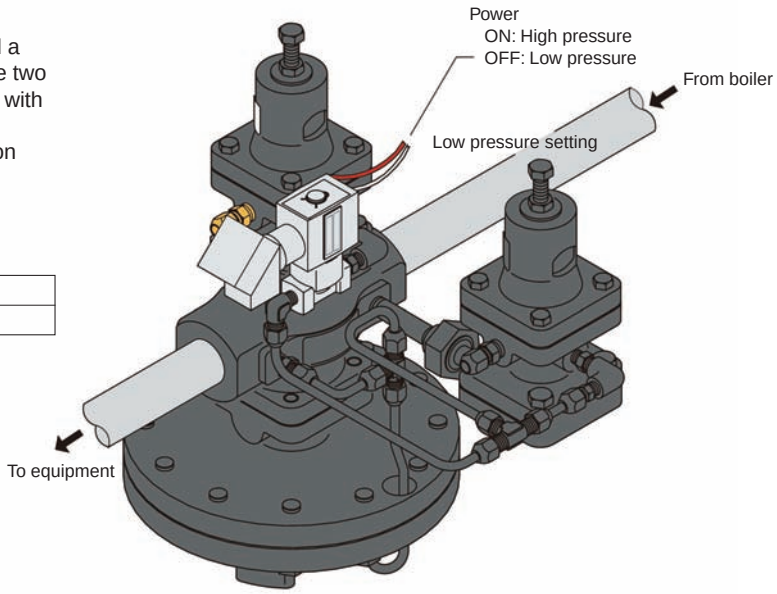

■CP-2001

Pressure reducing valve with ON-OFF control

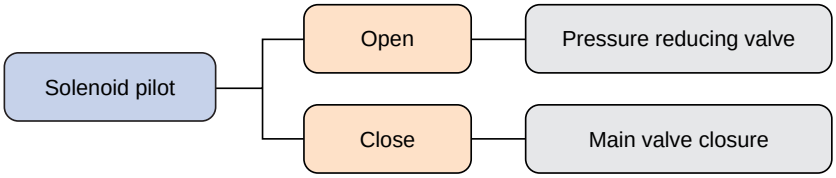

Application		Steam
Inlet pressure		0.1-1.0 MPa
Reduced pressure		0.02-0.15 MPa 0.1-0.85 MPa
Maximum temperature		183˚C
Actuation of solenoid valve		Normally closed
Rated voltage		AC 100 V, 50 / 60 Hz available AC 200 V, 50 / 60 Hz available
Connection		JIS Rc screwed JIS 10K flanged
Material	Main valve body	Ductile cast iron
	Main valve, valve seat	Stainless steel
	Diaphragm	Stainless steel
Nominal size		Screwed: 15A-50A Flanged: 15A-100A

・Please contact us about other specifications.

CP-2001 flanged type

■CP-2002

Pressure reducing valve and full-open valve

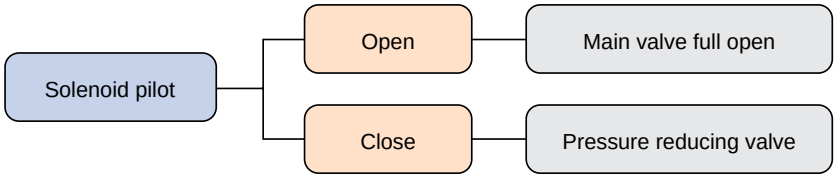

Application		Steam
Inlet pressure		0.1-1.0 MPa
Reduced pressure		0.02-0.15 MPa 0.1-0.85 MPa
Maximum temperature		183˚C
Actuation of solenoid valve		Normally closed
Rated voltage		AC 100 V, 50 / 60 Hz available AC 200 V, 50 / 60 Hz available
Connection		JIS Rc screwed JIS 10K flanged
Material	Main valve body	Ductile cast iron
	Main valve, valve seat	Stainless steel
	Diaphragm	Stainless steel
Nominal size		Screwed: 15A-50A Flanged: 15A-100A

・Please contact us about other specifications.

CP-2002 flanged type

■CP-2003

Two-point switching of reduced pressure

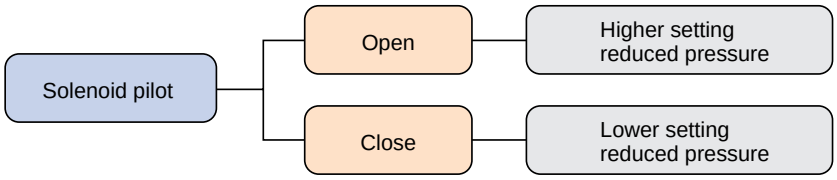

Application		Steam
Inlet pressure		0.1-1.0 MPa
Reduced pressure		0.02-0.15 MPa 0.1-0.85 MPa
Maximum temperature		183˚C
Actuation of solenoid valve		Normally closed
Rated voltage		AC 100 V, 50 / 60 Hz available AC 200 V, 50 / 60 Hz available
Connection		JIS Rc screwed JIS 10K flanged
Material	Main valve body	Ductile cast iron
	Main valve, valve seat	Stainless steel
	Diaphragm	Stainless steel
Nominal size		Screwed: 15A-50A Flanged: 15A-100A

・ Please contact us about other specifications.

CP-2003 flanged type

■CP-2004

Switching of reduced pressure with ON-OFF control

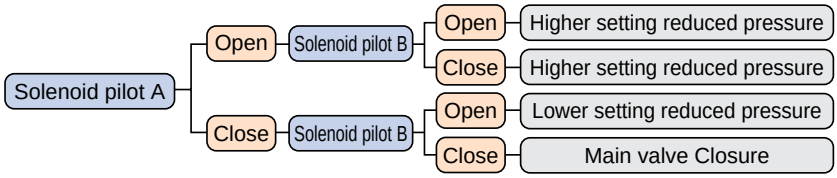

Application		Steam
Inlet pressure		0.1-1.0 MPa
Reduced pressure		0.02-0.15 MPa 0.1-0.85 MPa
Maximum temperature		183˚C
Actuation of solenoid valve		Normally closed
Rated voltage		AC 100 V, 50 / 60 Hz available AC 200 V, 50 / 60 Hz available
Connection		JIS Rc screwed JIS 10K flanged
Material	Main valve body	Ductile cast iron
	Main valve, valve seat	Stainless steel
	Diaphragm	Stainless steel
Nominal size		Screwed: 15A-50A Flanged: 15A-100A

・ Please contact us about other specifications.

CP-2004 flanged type

■CP-2005

Temperature regulating valve with pressure control

Pressure pilot — Temperature pilot — Temperature regulating valve while reducing pressure

Application	Heating fluid	Steam
	Heated fluid	Water, Oil, Liquid
Inlet pressure		0.1-2.0 MPa
Reduced pressure		0.02-0.15 MPa 0.1-1.4 MPa
Maximum temperature		220˚C
Bulb maximum pressure		1.0 MPa
Temperature adjustment range		-8 – 183˚C
Connection		JIS Rc screwed JIS 10K/20K flanged
Material	Main valve body	Ductile cast iron
	Main valve, valve seat	Stainless steel
	Diaphragm	Stainless steel
Nominal size		Screwed: 15A-50A Flanged: 15A-100A

・Please contact us about other specifications.

CP-2005 flanged type

■CP-2006

Temperature regulating valve with ON-OFF control

Solenoid pilot — Open — Temperature regulating valve
Solenoid pilot — Close — Main valve closure

Application	Heating fluid	Steam
	Heated fluid	Water, Oil, Liquid
Maximum pressure		1.0 MPa
Maximum temperature		183˚C
Actuation of solenoid valve		Normally closed
Rated voltage		AC 100 V, 50 / 60 Hz available AC 200 V, 50 / 60 Hz available
Bulb maximum pressure		1.0 MPa
Temperature adjustment range		-8 – 183˚C
Connection		JIS Rc screwed JIS 10K flanged
Material	Body	Ductile cast iron
	Main valve, valve seat	Stainless steel
	Diaphragm	Stainless steel
Nominal size		Screwed: 15A-50A Flanged: 15A-100A

・Please contact us about other specifications.

CP-2006 flanged type

GP-2000CS

Features

1. Unique patented diaphragms enable superior durability.
2. 200 mesh integral strainer prevents most scale problem on the pilot valve.
3. The GP-2000 Series, Yoshitake's original pilot-operated valve, has proven its contribution to various systems.
4. Spherical valve provides a tight seal meeting ANSI Class Ⅳ.

Screwed type

Flanged type

Specifications

Model		GP-2000CS			
Application		Steam			
Max. inlet pressure		3.0 MPa	1.0 MPa	2.0 MPa	3.0 MPa
Reduced pressure		0.02-0.15 MPa 0.1-1.4 MPa 1.3-2.0 MPa	0.02-0.15 MPa 0.1-0.85 MPa	0.02-0.15 MPa 0.1-1.4 MPa 1.3-1.7 MPa	0.02-0.15 MPa 0.1-1.4 MPa 1.3-2.0 MPa
		85% or less of inlet pressure (gauge pressure)			
Minimum differential pressure		0.05 MPa			
Maximum pressure reduction ratio		20:1			
Maximum temperature		260˚C			
Valve seat leakage		0.01% or less of rated flow rate			
Material	Body	Cast carbon steel			
	Main valve, valve seat	Stellite overlaid stainless steel			
	Pilot valve, pilot valve seat	Stainless steel			
	Diaphragm	Stainless steel			
Connection		JIS Rc screwed	JIS 10K FF flanged	JIS 20K RF flanged	JIS 30K RF flanged

・Available with ASME or EN flanged.

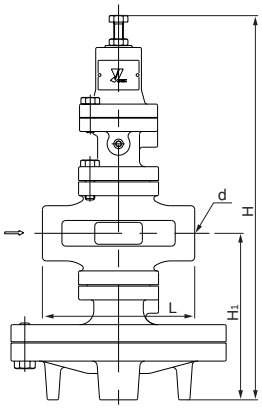

Dimensions (mm) and Weights (kg)

●JIS Rc screwed

Nominal size	d	L	H	H1	Weight
15A	Rc 1/2	150	398	170	16
20A	Rc 3/4	150	398	170	16
25A	Rc 1	160	404	175	21.5
32A	Rc 1-1/4	180	434	192	24
40A	Rc 1-1/2	180	434	192	24
50A	Rc 2	230	498	216	37

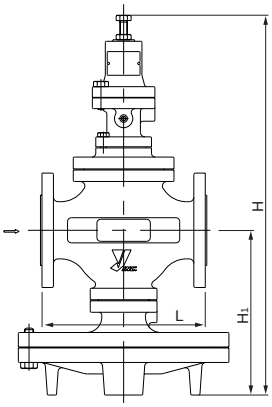

●JIS 30K RF flanged

Nominal size	L	H	H1	Weight
15A	240	398	170	18
20A	240	398	170	18
25A	250	404	175	24.5
32A	260	434	192	27
40A	260	434	192	27
50A	230	498	216	42
65A	294	552	251	75
80A	314	575	264	84
100A	358	658	321	133

・15A to 40A are welded flanged.

Nominal Sizes Selection Chart (For Steam)

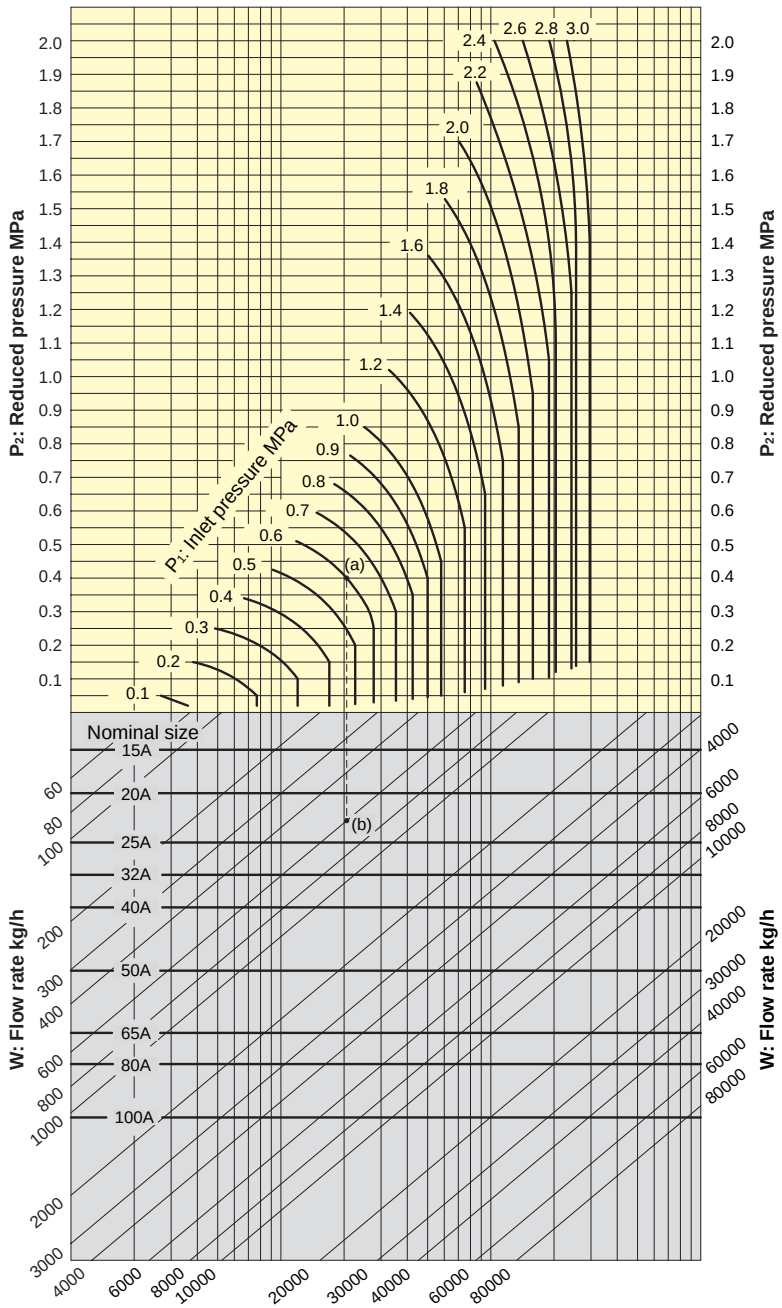

[Example]
When selecting the nominal size of a pressure reducing valve whose inlet pressure (P_1), reduced pressure (P_2), and flow rate are 0.6 MPa, 0.4 MPa, and 600 kg/h, respectively, first find intersection point (a) of the inlet pressure of 0.6 MPa and the reduced pressure of 0.4 MPa. Trace down vertically from this intersection point to find intersection point (b) with the flow rate of 600 kg/h. Since intersection point (b) lies between nominal sizes 20A and 25A, select the larger one, 25A.

- Set the safety factor at 80 to 90%.

Specifications Selection Chart

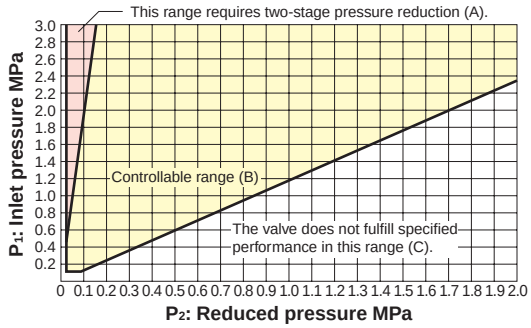

Based on the selection chart above, select a pressure reducing valve in the optimum manner. On the selection chart, first find the intersection point of the inlet pressure (P_1) and the reduced pressure (P_2). Two-stage pressure reduction is required if the intersection point lies in range (A), or the pressures are controllable with a single pressure reducing valve if the intersection point is within range (B). The valve does not fulfill specified performance in range (C). To adopt two-stage pressure reduction, separate two pressure reducing valves as far away from each other as possible.

Flow Characteristic Chart

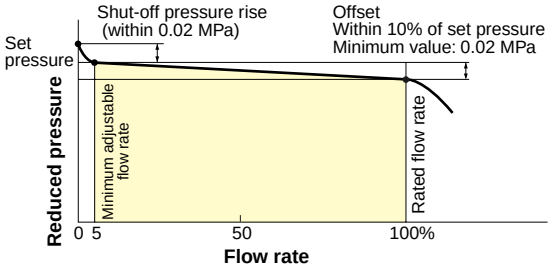

When selecting a nominal size, set the flow rate at 80 to 90% of the rated flow rate, allowing for the pressure loss and heat loss of the stop valve, strainer, etc. to be used before or after the pressure reducing valve. To enable the pressure reducing valve to show a maximum flow characteristic, do not select a small piping diameter, as a countermeasure against the effect of piping resistance. Select a nominal size based on the nominal sizes selection chart.

Pressure Characteristic Chart

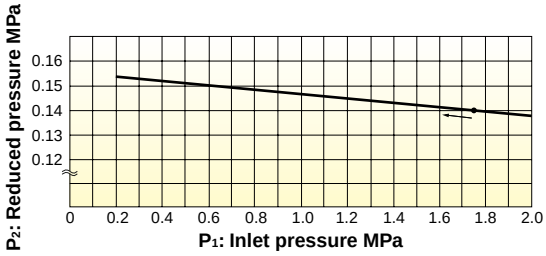

This chart shows variation in reduced pressure when the inlet pressure of 1.75 MPa is changed between 0.2 MPa and 2.0 MPa while the reduced pressure is set at 0.14 MPa.

GP-1000

GP-1000・1002

GP-1200

GP-1010

GP-1001

Features

1. Significantly improved workability and durability compared with conventional pressure reducing valves.
2. Spherical main valve offers great sealability and great reduction of valve seat leakage (compliant with ANSI Class IV).
3. Compliant with SHASE-S106 Pressure Reducing Valves (by the Society of Heating, Air-Conditioning and Sanitary Engineers of Japan).
4. Simple and robust internal structure.

Description of GP-1000 Series model code

GP-1000□

- Material, S: trim parts made of stainless steel, SS: wetted parts made of stainless steel, AS: all stainless steel
- 0: standard, 1: equipped with a handle, 2: for low pressure
- 0: flanged, 1: screwed
- 0: standard, 2: air loading type

Specifications

Model		GP-1000・1001	GP-1002	GP-1010	GP-1200	GP-1210
Application		Steam				
Inlet pressure		0.1-1.0 MPa	0.1-0.5 MPa	0.1-1.0 MPa		
Reduced pressure		0.05-0.9 MPa	0.03-0.15 MPa	0.05-0.9 MPa		
		90% or less of inlet pressure (gauge pressure)				
Minimum differential pressure		0.05 MPa				
Maximum pressure reduction ratio		20:1				
Maximum temperature		220˚C				
Valve seat leakage		0.01% or less of rated flow				
Material	Body	Ductile cast iron				
	Valve, valve seat	Stainless steel				
	Piston, cylinder	Brass or bronze				
Connection		JIS 10K FF flanged		JIS Rc screwed	JIS 10K FF flanged	JIS Rc screwed

・Available with trim parts (piston and cylinder) made of stainless steel (GP-□□□□S).

Dimensions (mm) and Weights (kg)

●GP-1000・1002

Nominal size	L	H_1	H	Weight
15A	150	64	285	8.0
20A	155	64	285	8.5
25A	160	67	300	10.0
32A	190	82	323	14.0
40A	190	82	323	14.5
50A	220	93	347	20.0
65A	245	100	357	30.0
80A	290	122	404	35.0
100A	330	144	450	52.5

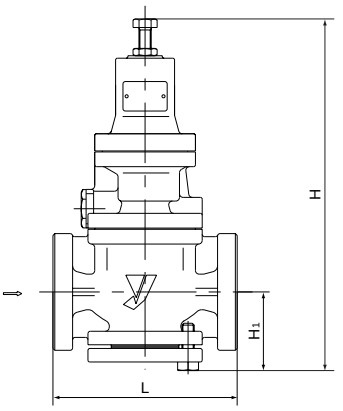

●GP-1010

Nominal size	d	L	H_1	H	Weight
15A	Rc 1/2	150	64	285	7.0
20A	Rc 3/4	155	64	285	7.0
25A	Rc 1	160	67	300	8.5
32A	Rc 1-1/4	190	82	323	12.0
40A	Rc 1-1/2	190	82	323	12.5
50A	Rc 2	220	93	347	18.0

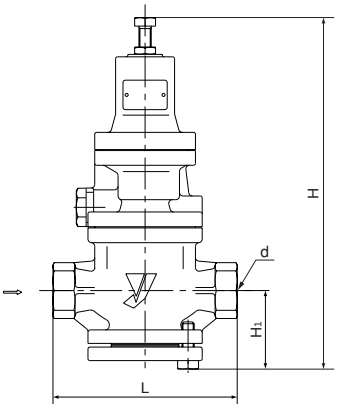

●GP-1200

Nominal size	L	H_1	H	Weight
15A	150	64	220	8.0
20A	155	64	220	8.5
25A	160	67	235	10.0
32A	190	82	258	14.0
40A	190	82	258	14.5
50A	220	93	282	20.0
65A	245	100	292	30.0
80A	290	122	339	35.0
100A	330	144	385	52.5

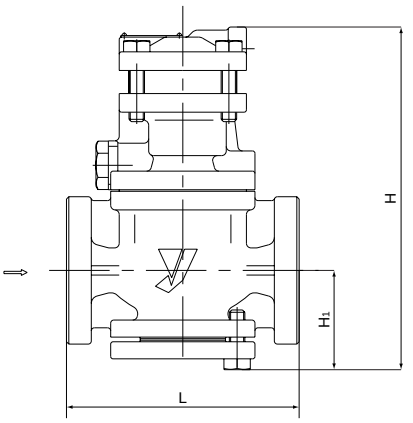

●GP-1210

Nominal size	d	L	H_1	H	Weight
15A	Rc 1/2	150	64	220	7.0
20A	Rc 3/4	155	64	220	7.0
25A	Rc 1	160	67	235	8.5
32A	Rc 1-1/4	190	82	258	12.0
40A	Rc 1-1/2	190	82	258	12.5
50A	Rc 2	220	93	282	18.0

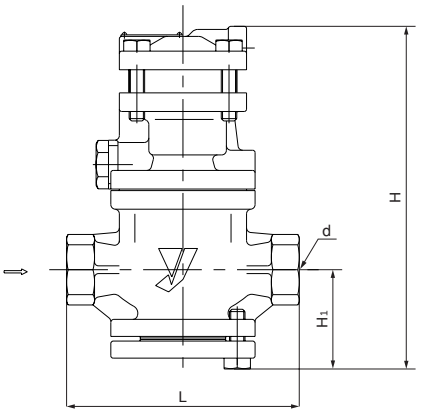

GP-1000SS・1000AS

Features

1. Improved corrosion resistance by stainless steel wetted parts (GP-1000SS) or all stainless steel made (GP-1000AS).
2. Spherical main valve offers great sealability and great reduction of valve seat leakage (compliant with ANSI Class IV).
3. Compliant with SHASE-S106 Pressure Reducing Valves (by the Society of Heating, Air-Conditioning and Sanitary Engineers of Japan).

Specifications

		Stainless steel wetted parts	All stainless steel made
Model		**GP-1000SS**	**GP1000AS**
Application		Steam	
Inlet pressure		0.1-1.0 MPa	
Reduced pressure		0.05-0.9 MPa	
		90% or less of inlet pressure (gauge pressure)	
Minimum differential pressure		0.05 MPa	
Maximum pressure reduction ratio		20:1	
Maximum temperature		220˚C	
Valve seat leakage		0.01% or less of rated flow	
Material	Body	Cast stainless steel	
	Valve, valve seat	Stainless steel	
	Piston, cylinder	Stainless steel	
Connection		JIS 10K FF flanged	

GP-1000AS

Dimensions (mm) and Weights (kg)

Nominal size	L	H_1	H	Weight
15A	150	288 (298)	67	8.3 (8.5)
20A	155	288 (298)	67	8.8 (9.0)
25A	160	303 (313)	70	10.5 (10.7)
32A	190	326 (336)	85	14.8 (15.0)
40A	190	326 (336)	85	15.3 (15.5)
50A	220	350 (360)	96	20.8 (21.0)
65A	245	360 (370)	103	27.4 (27.6)
80A	290	407 (417)	125	38.8 (39.0)
100A	330	454 (464)	148	54.5 (54.7)

・The values in parentheses are the dimensions and weights of the GP-1000AS.

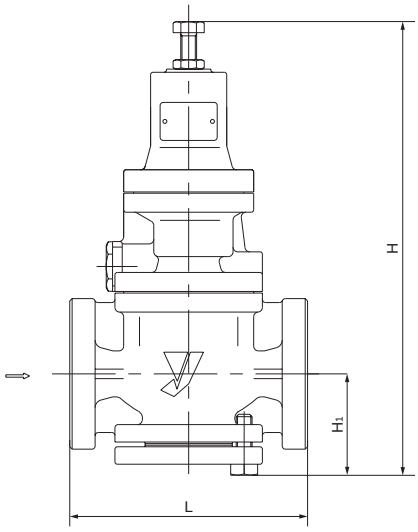

Table of Corrected Cv Values

●Table of rated Cv values (Cv value when the correction factor C = 1)

Nominal size	15A	20A	25A	32A	40A	50A	65A	80A	100A
Cv values	1	2.3	4	6.5	9	16	25	36	64

Note) When the inlet pressure is more than 0.7 MPa and the pressure reduction ratio is more than 10:1, calculate the corrected Cv value by multiplying the rated Cv value by the correction factor C obtained from Fig. 1.

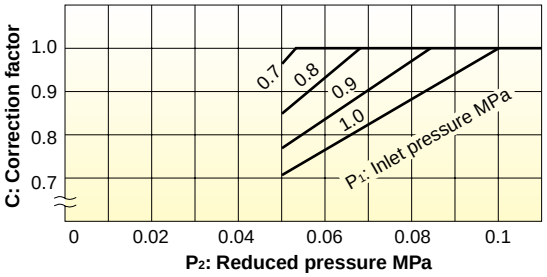

Fig. 1: Corrected Cv value

Nominal Sizes Selection Chart (For Steam)

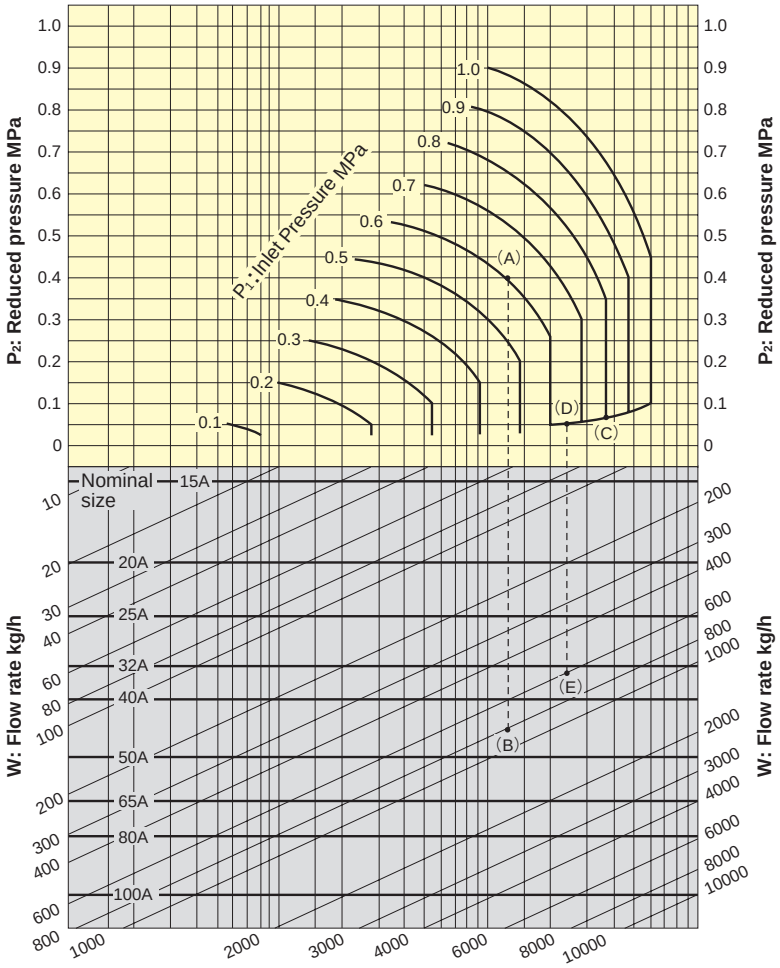

[Example 1]
When selecting the nominal size of a pressure reducing valve whose inlet pressure (P_1), reduced pressure (P_2), and steam flow rate are 0.6 MPa, 0.4 MPa, and 800 kg/h, respectively, first find intersection point (A) of the inlet pressure of 0.6 MPa and the reduced pressure of 0.4 MPa. Trace down vertically from this intersection point to find intersection point (B) with the flow rate of 800 kg/h. Since intersection point (B) lies between nominal sizes 40A and 50A, select the larger one, 50A.

[Example 2]
When selecting the nominal size of a pressure reducing valve whose inlet pressure (P_1), reduced pressure (P_2), and steam flow rate are 0.8 MPa, 0.05 MPa, and 600 kg/h, respectively, first find intersection point (C) of the inlet pressure of 0.8 MPa and the diagonal line. Trace down to the left from this intersection point to find intersection point (D) with the reduced pressure of 0.05 MPa.
Trace down vertically from intersection point (D) to find intersection point (E) with the flow rate of 600 kg/h. Since intersection point (E) lies between nominal sizes 32A and 40A, select the larger one, 40A.
・Set the safety factor at 80 to 90%.

Specifications Selection Chart

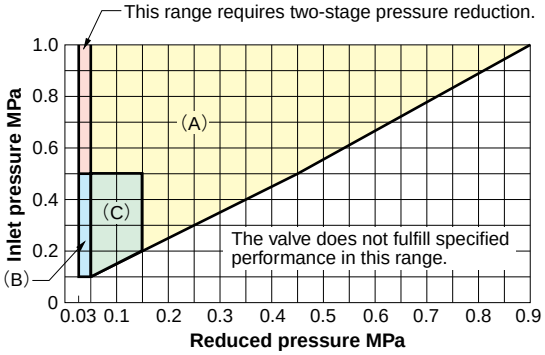

Find the intersection point of the inlet and reduced pressures. If the intersection point is within any of the ranges shown in the chart above, the pressures are controllable.
・Range (A) and (C): GP-1000 Series except GP-1002 and 1012
・Range (B) and (C): GP-1002 and 1012

Flow Characteristic Chart

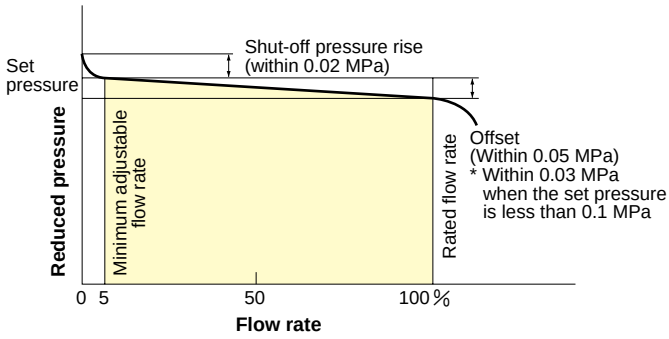

Pressure Characteristic Chart

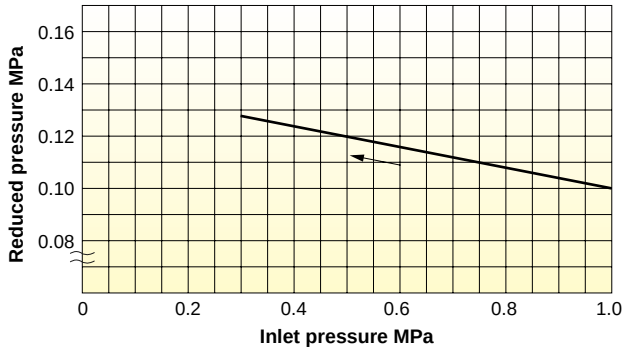

This chart shows variation in reduced pressure when the inlet pressure of 1.0 MPa is changed between 0.3 MPa and 1.0 MPa while the reduced pressure is set at 0.1 MPa.

Loading Air Pressure-set Pressure Chart (GP-1200・1210)

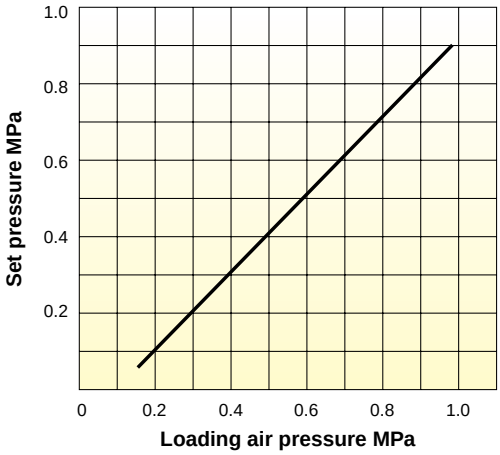

Basically, the set pressure to the loading air pressure is as shown on the left.
The set pressure is slightly different depending on the conditions. For the actual use, adjust the loading air pressure suitable for necessary set pressure.

GP-1000 Flow Rate Table

(kg/h)

P_1 (MPa)	P_2 (MPa)	15A	20A	25A	32A	40A	50A	65A	80A	100A
1	0.05 *	92	212	369	600	831	1,478	2,310	3,326	5,913
	0.1-0.4	132	303	528	858	1,188	2,112	3,300	4,752	8,448
	0.5	127	292	508	825	1,143	2,033	3,176	4,574	8,132
	0.6	116	268	467	760	1,052	1,871	2,923	4,210	7,484
	0.7	104	239	416	676	936	1,664	2,601	3,745	6,659
	0.8	87	200	348	566	784	1,394	2,179	3,137	5,578
	0.9	63	145	252	410	568	1,010	1,578	2,273	4042
0.9	0.1-0.4	120	276	480	780	1,080	1,920	3,000	4,320	7,680
	0.5	110	253	441	716	992	1,764	2,756	3,969	7,056
	0.6	98	226	393	639	885	1,574	2,460	3,543	6,299
	0.7	82	190	330	537	744	1,323	2,067	2,976	5,292
	0.8	60	138	240	390	540	961	1,501	2,162	3,844
0.8	0.1-0.3	108	248	432	702	972	1,728	2,700	3,888	6,912
	0.4	103	237	412	670	928	1,650	2,578	3,712	6,600
	0.5	92	212	369	600	832	1,479	2,311	3,328	5,916
	0.6	77	179	311	506	701	1,247	1,949	2,806	4,989
	0.7	56	130	227	369	511	909	1,420	2,045	3,636
0.7	0.1-0.3	96	220	384	624	864	1,536	2,400	3,456	6,144
	0.4	86	197	344	559	774	1,377	2,151	3,098	5,508
	0.5	72	167	291	474	656	1,166	1,823	2,625	4,667
	0.6	53	122	213	346	480	854	1,334	1,921	3,416
0.6	0.1-0.2	84	193	336	546	756	1,344	2,100	3,024	5,376
	0.3	79	182	316	514	712	1,266	1,979	2,850	5,067
	0.4	67	155	270	438	607	1,080	1,687	2,430	4,321
	0.5	49	114	198	322	447	795	1,242	1,788	3,180
0.5	0.1-0.2	72	165	288	468	648	1,152	1,800	2,592	4,608
	0.3	61	141	246	400	554	986	1,540	2,218	3,944
	0.4	45	105	182	297	411	731	1,142	1,645	2,925
0.4	0.1	60	138	240	390	540	960	1,500	2,160	3,840
	0.2	55	126	220	358	496	882	1,378	1,984	3,528
	0.3	41	95	165	268	372	661	1,033	1,488	2,646
0.3	0.1	48	110	192	312	432	768	1,200	1,728	3,072
	0.2	36	83	145	237	328	583	911	1,312	2,333
0.2	0.1	30	70	123	200	277	493	770	1,109	1,972
0.1	0.05	18	41	72	118	164	291	455	656	1,166

* When the inlet pressure is more than 0.7 MPa and the pressure reduction ratio is more than 10:1, calculate the corrected Cv value multiplying the rated Cv value by the correction factor C obtained from Fig.1.

GP-1000EN・1000H

Features

1. The GP-1000EN can be replaced easily from existing valve because it complies with face-to-face dimensions of the EN standard.
2. Respond very sharply to the fluctuation of inlet pressure and the change of the flow rate, so that the reduced pressure can be kept at a constant level.
3. Pressure adjustment is easy, and the set pressure range is wide.
4. Compliant with the standard of SHASE-S106 Pressure Reducing Valves (by the Society of Heating, Air-Conditioning and Sanitary Engineers of Japan).

Specifications

Model		GP-1000EN	GP-1000H
Application		Steam	
Inlet pressure		0.1-1.6 MPa	
Reduced pressure		(A) 0.05-0.9 MPa (B) 0.9-1.4 MPa	
		90% or less of inlet pressure (gauge pressure)	
Minimum differential pressure		0.05 MPa	
Maximum pressure reduction ratio		20:1	
Maximum temperature		/ / -Á@	
Valve seat leakage		0.01% or less of rated flow rate	
Material	Body	Ductile cast iron	
	Main valve, valve seat	Stainless steel	
	Pilot valve, pilot valve seat	Stainless steel	
	Piston, cylinder	Stainless steel	
	Diaphragm	Stainless steel	
Connection		EN1092 PN25	JIS 16K FF flanged ASME Class 300 flanged

・Available with JIS Rc screwed (GP-1010H).

GP-1000H

Dimensions (mm) and Weights (kg)

・

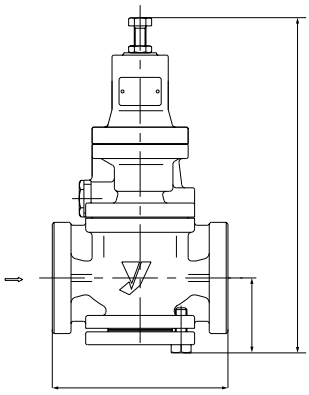

Specifications Selection Chart

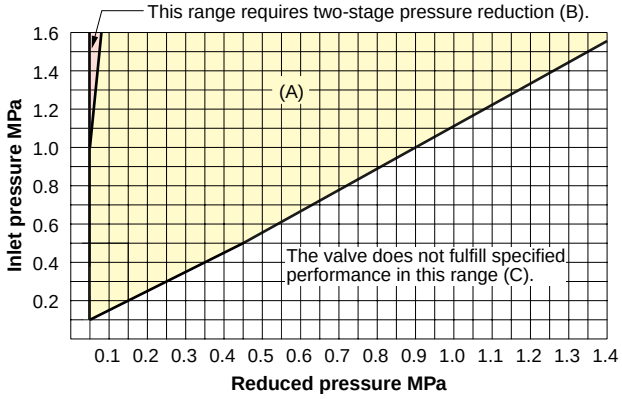

●

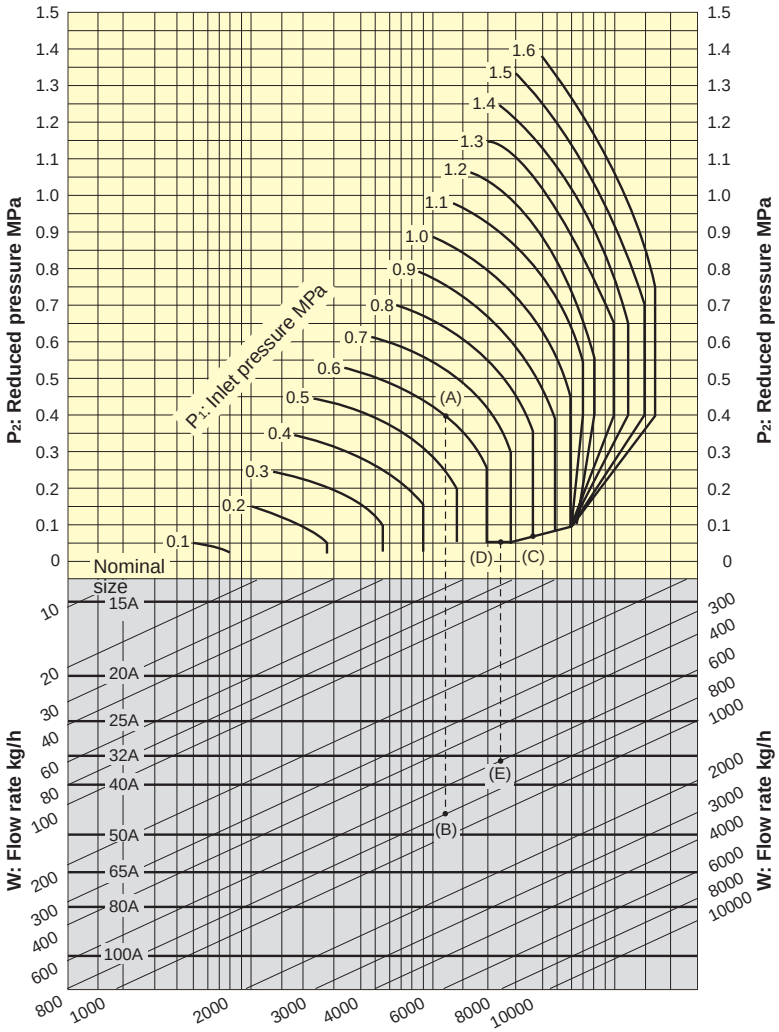
P2: Reduced pressure MPa
W: Flow rate kg/h
P1: Inlet pressure MPa
Nominal size
15A
20A
25A
32A
40A
50A
65A
80A
100A
(A)
(B)
(C)
(D)
(E)

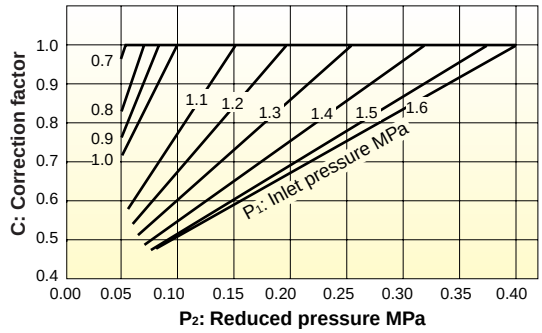
C: Correction factor
P2: Reduced pressure MPa
P1: Inlet pressure MPa

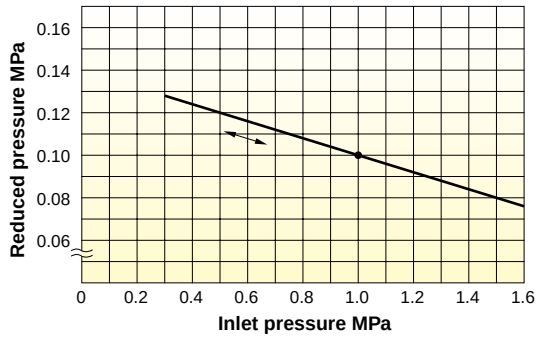
Reduced pressure MPa
Inlet pressure MPa

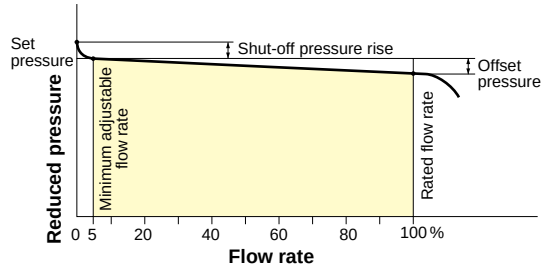
Set pressure
Shut-off pressure rise
Offset pressure
Reduced pressure
Minimum adjustable flow rate
Rated flow rate
Flow rate

GP-27

Features

1. Large capacity and distinguished performance. Can respond very immediately to the fluctuation of inlet pressure and the change of flow rate to keep reduced pressure at a constant level.
2. Quite simple structure, less prone to fail and easy to handle.
3. Easy pressure adjustment and wide set pressure range.
4. No need for auxiliary power (air or electricity). Compactness makes plumbing work easy.
5. Compliant with SHASE-S106 Pressure Reducing Valves (by the Society of Heating, Air-Conditioning and Sanitary Engineers of Japan).

Specifications

Model		GP-27
Application		Steam
Inlet pressure		0.1-1.0 MPa
Reduced pressure		0.03-0.8 MPa
		80% or less of inlet pressure (absolute pressure)
Minimum differential pressure		0.07 MPa
Maximum pressure reduction ratio		10:1
Maximum temperature		220˚C
Valve seat leakage		0.05% or less of rated flow rate
Material	Body	Ductile cast iron
	Main valve, valve seat	Stainless steel
	Pilot valve, pilot valve seat	Stainless steel
	Piston, cylinder	Bronze
	Diaphragm	Stainless steel
Connection		JIS 10K FF flanged

・Available with trim parts (piston and cylinder) made of stainless steel.

Dimensions (mm) and Weights (kg)

Nominal size	L	H	H_1	Weight
125A	375	627	162	90.0
150A	420	686	190	135.0
200A	490	765	220	204.0

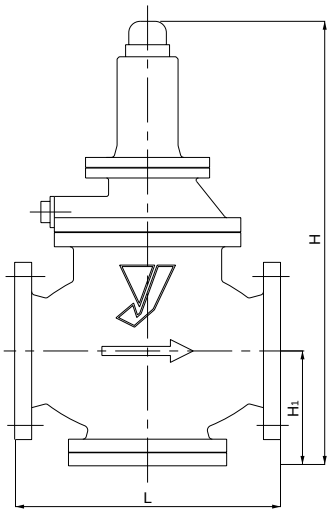

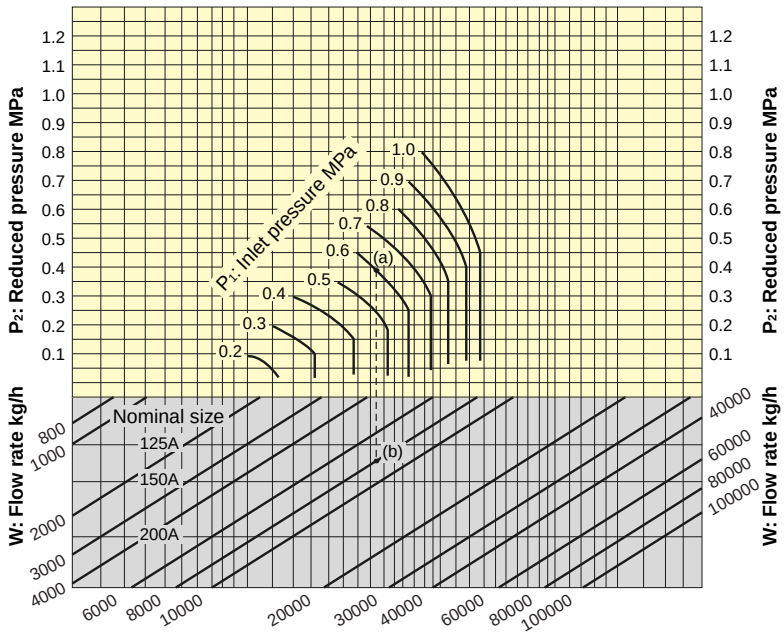
P2: Reduced pressure MPa
W: Flow rate kg/h
P1: Inlet pressure MPa
1.0
0.9
0.8
0.7
0.6
0.5
0.4
0.3
0.2
(a)
(b)
Nominal size
125A
150A
200A
800
1000
2000
3000
4000
6000
8000
10000
20000
30000
40000
60000
80000
100000

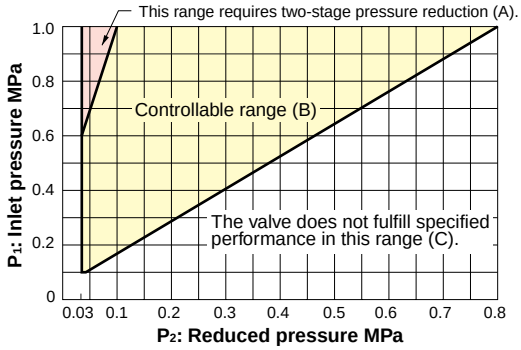
This range requires two-stage pressure reduction (A).
Controllable range (B)
The valve does not fulfill specified performance in this range (C).
P1: Inlet pressure MPa
P2: Reduced pressure MPa
0.03
0.1
0.2
0.3
0.4
0.5
0.6
0.7
0.8
1.0

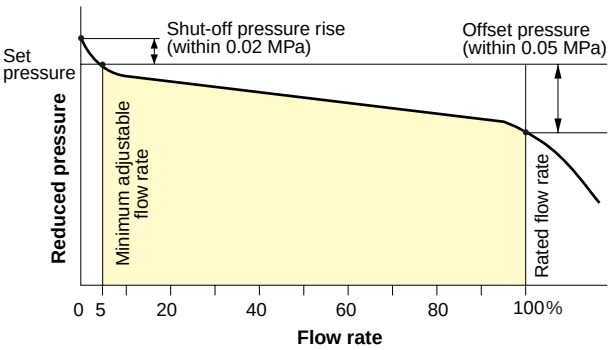
Set pressure
Shut-off pressure rise (within 0.02 MPa)
Offset pressure (within 0.05 MPa)
Reduced pressure
Minimum adjustable flow rate
Rated flow rate
0
5
20
40
60
80
100%
Flow rate

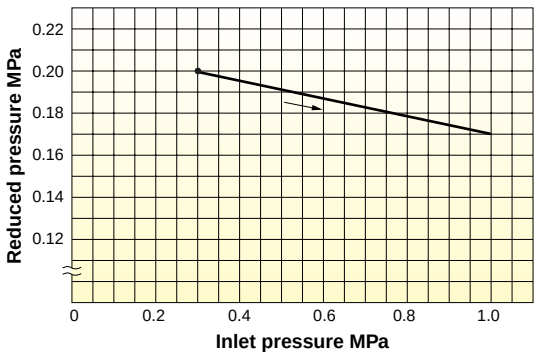
Reduced pressure MPa
0.22
0.20
0.18
0.16
0.14
0.12
0
0.2
0.4
0.6
0.8
1.0
Inlet pressure MPa

GD-30·30S

	- ·	-
	-	
	-	
	-	
		Cast stainless steel (SCS14A)
		Stainless steel

·

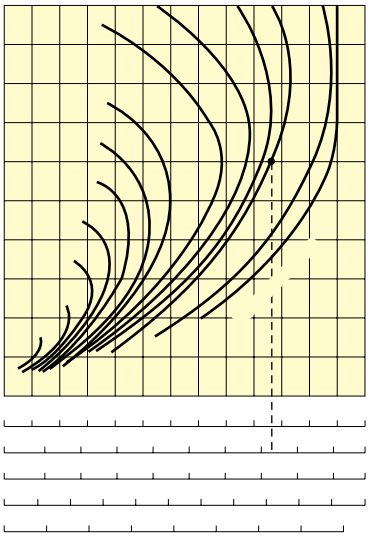

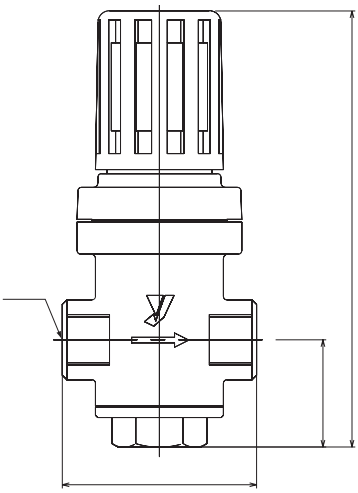

·

GD-45P·45

	·
	-
	-
	-

·

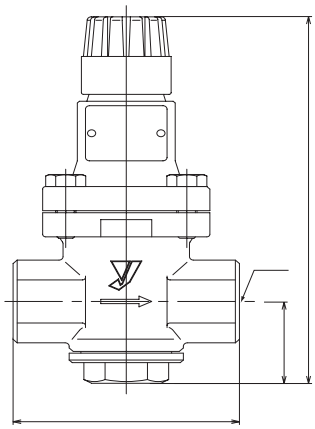

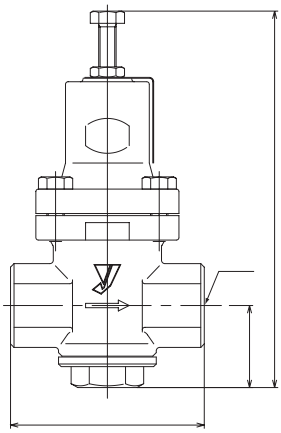

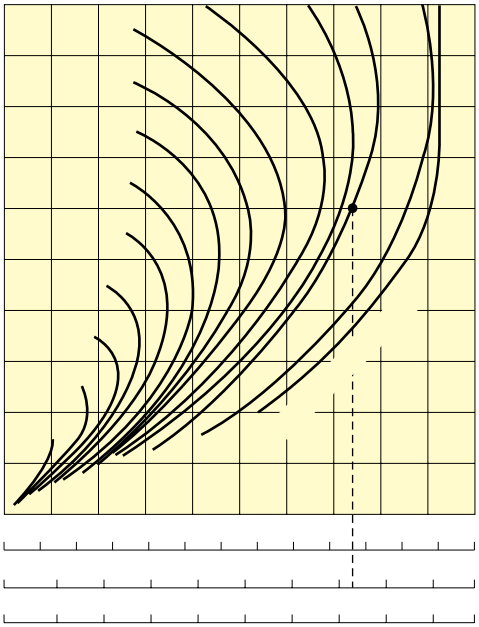

·

GD-6N

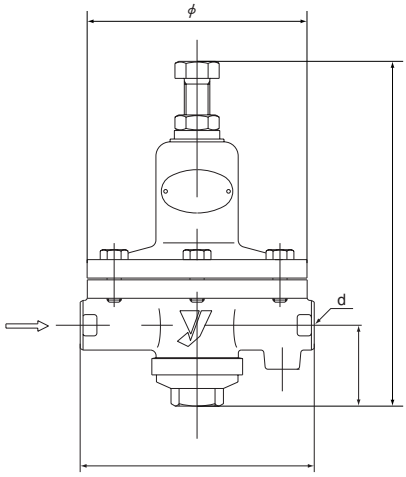
ϕ
d

		-

•

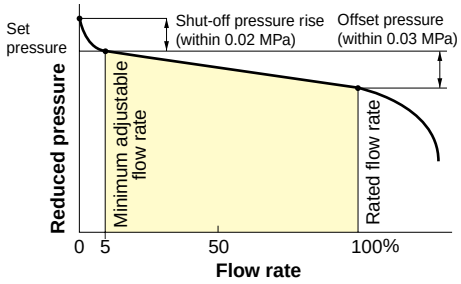
Set pressure
Shut-off pressure rise (within 0.02 MPa)
Offset pressure (within 0.03 MPa)
Reduced pressure
Minimum adjustable flow rate
Rated flow rate
0
5
50
100%
Flow rate

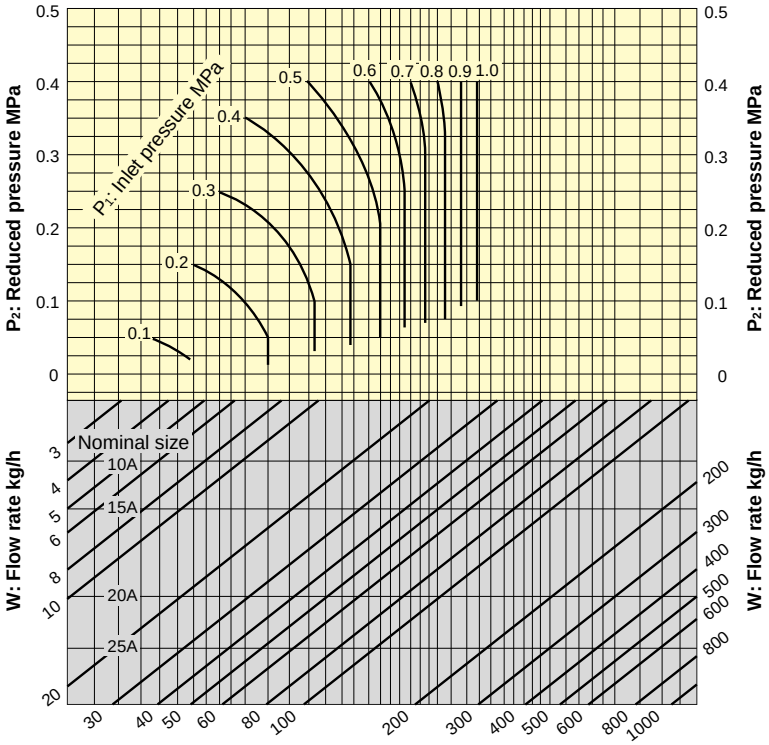
P2: Reduced pressure MPa
P1: Inlet pressure MPa
0.1
0.2
0.3
0.4
0.5
0.6
0.7
0.8
0.9
1.0
W: Flow rate kg/h
Nominal size
10A
15A
20A
25A
30
40
50
60
80
100
200
300
400
500
600
800
1000

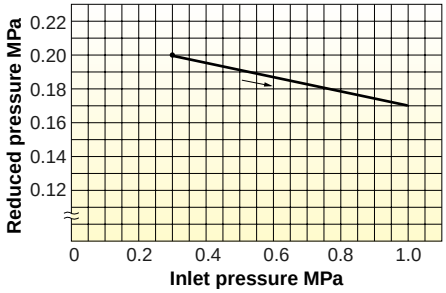
Reduced pressure MPa
0.22
0.20
0.18
0.16
0.14
0.12
0
0.2
0.4
0.6
0.8
1.0
Inlet pressure MPa

•

GD-200・200H・200C

Features

1. Pressure balance structure can keep the reduced pressure at a constant level without being affected by inlet pressure.
2. Highly wear-resistance and durability of stainless steel made valve seat.
3. Maintenance and inspection can be conducted easily by disassembling simply from the upper side.
4. A rubber disc prevents leakage when the valve is closed.
5. The GD-200C provides excellent corrosion resistance due to inner and outer body surface coated with Nylon 11.

GD-200・200H

GD-200C

Specifications

Model		GD-200	GD-200C	GD-200H
Application		Cold and hot water, Oil (kerosene, heavy oils A and B), Air, Other non-dangerous fluids		
Inlet pressure		1.0 MPa or less		2.0 MPa or less
Reduced pressure		15A-80A (A) 0.05-0.25 MPa (B) 0.26-0.7 MPa 100A-150A (A) 0.05-0.25 MPa (B) 0.26-0.5 MPa		15A-50A (A) 0.05-0.25 MPa (B) 0.26-0.7 MPa (C) 0.5-1.0 MPa 65A-80A (A) 0.05-0.25 MPa (B) 0.26-0.7 MPa (C) 0.5-0.9 MPa 100A-150A (A) 0.05-0.25 MPa (B) 0.26-0.5 MPa (C) 0.5-0.75 MPa
Minimum differential pressure		0.05 MPa		
Maximum pressure reduction ratio		10:1		
Minimum adjustable flow rate		Water: 5 L/min Air: 10 m³/h (standard condition)		
Application temperature		5-80˚C	5-60˚C	5-80˚C
Fluid viscosity		600 cSt or less		
Material	Body	Ductile cast iron		
	Valve seat	Stainless steel		
	Valve disc	NBR		
	Diaphragm	NBR		
	Connection	JIS 10K FF flanged		JIS 20K RF flanged
Inside surface treatment of body		15A-100A: Electrodeposition coating 125A-150A: Tar-based coating (black) or electrodeposition coating	Nylon 11 (inside and outside surfaces of body)	15A-100A: Electrodeposition coating 125A-150A: Tar-based coating (black) or electrodeposition coating

・Available with FKM type (except for the GD-200H (C) of 65A to 150A).
・Available with pressure gauge.
・Available with the GD-200HS for flushing water.

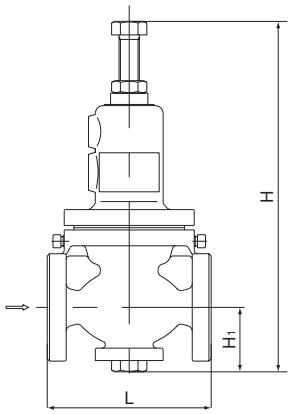

GD-200・200H

Dimensions (mm) and Weights (kg)

Nominal size	L	H		H1		Weight	
		GD-200・200H	GD-200C	GD-200・200H	GD-200C	GD-200・200H	GD-200C
15A	145	310	296	57		8.2	8.3
20A	150	310	296	57		8.2	8.3
25A	150	333	318	67		10.0	10.1
32A	195	397	398	76		17.3	17.4
40A	195	397	398	76		17.3	17.4
50A	195	415	412	81		19.2	19.3
65A	270	555	573	110	113	40.0	40.1
80A	270	582	598	125	128	43.7	43.8
100A	308	645	666	143	146	70.7	70.8
125A	380 (384)	849	875	179	182	144.0 (145.0)	144.1
150A	400 (404)	918	930	204	207	173.0 (175.0)	173.1

・The above values in parentheses are the dimensions and weights of the GD-200H.

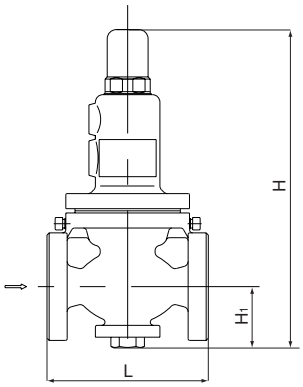

GD-200C

GD-20

Features

1. Pressure balance structure can keep the reduced pressure at a constant level without being affected by inlet pressure.
2. Available with stainless steel wetted parts and all stainless steel made.
3. Valve disc prevents leakage when the valve is closed.

Specifications

Model		Stainless steel wetted parts	All stainless steel made
Application		Cold and hot water, Oil (kerosene, heavy oils A and B), Air, Other non-dangerous fluids	
Inlet pressure		1.0 MPa or less	
Reduced pressure		15A-80A (A) 0.05-0.25 MPa (B) 0.26-0.7 MPa 100A (A) 0.05-0.25 MPa (B) 0.26-0.5 MPa	15A-25A (A) 0.05-0.2 MPa (B) 0.21-0.6 MPa 32A-50A (A) 0.05-0.2 MPa (B) 0.21-0.46 MPa
Minimum differential pressure		0.05 MPa	
Maximum pressure reduction ratio		10:1	
Application temperature		5-80˚C	
Fluid viscosity		600 cSt or less	
Material	Body	Cast Stainless steel	
	Valve seat	Stainless steel	
	Valve disc	NBR	
	Diaphragm	NBR	
Connection		JIS 10K FF flanged	

・Available with FKM.

Dimensions (mm) and Weights (kg)

Nominal size	L	H		H_1	Weight	
		Stainless steel wetted parts	All stainless steel made		Stainless steel wetted parts	All stainless steel made
15A	145	310	297	57	9.8	10.6
20A	150	310	297	57	9.8	10.6
25A	150	333	320	67	12.0	13.0
32A	195	397	397	76	20.7	22.5
40A	195	397	397	76	20.7	22.5
50A	195	415	415	81	23.0	25.0
65A	270	555	555	110	48.0	52.0
80A	270	582	582	125	52.4	56.8
100A	308	645	645	143	84.0	91.0

・Please contact us about availability of 65A to 100A.

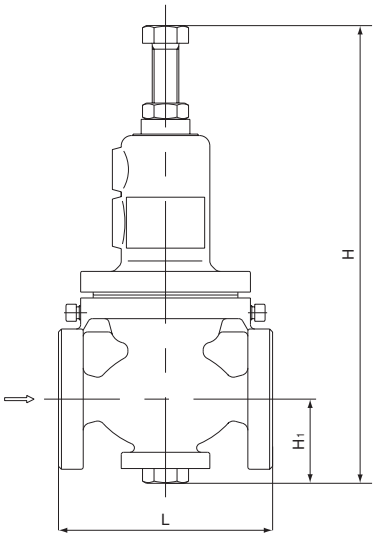

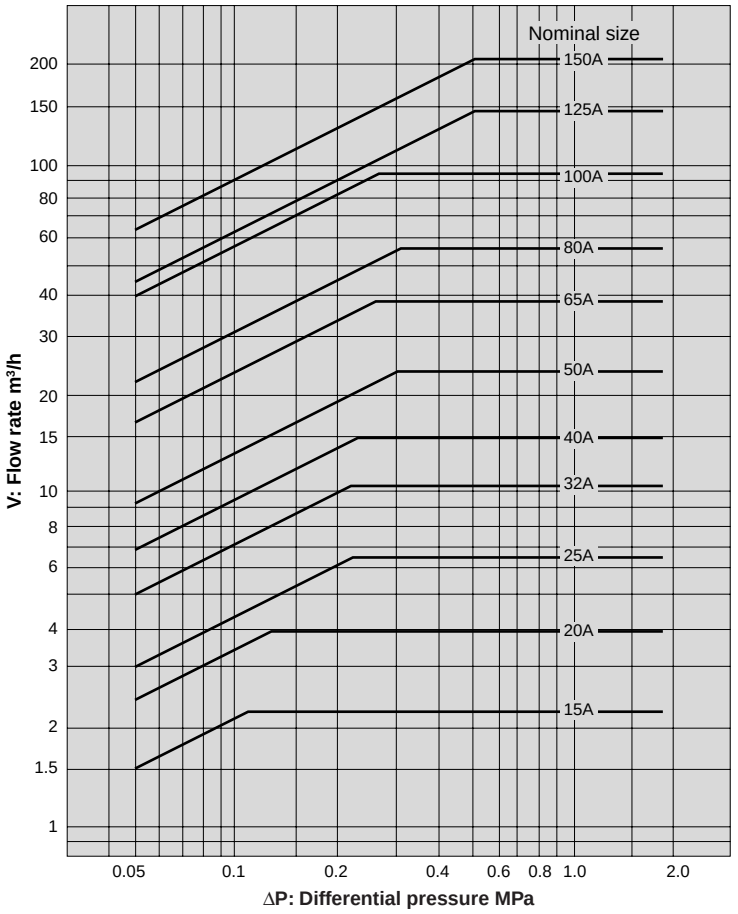

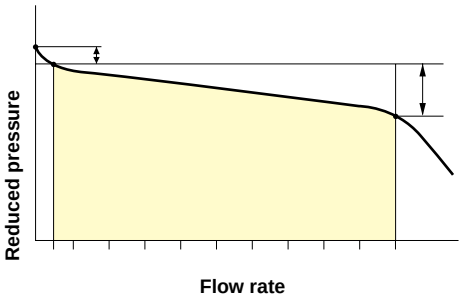

Nominal size	Pressure range	Offset pressure
15-100A	(A), (B)	Within 0.05 MPa
	(C)	Within 0.11 MPa
125,150A	(A)	Within 0.05 MPa
	(B)	Within 0.07 MPa
	(C)	Within 0.11 MPa

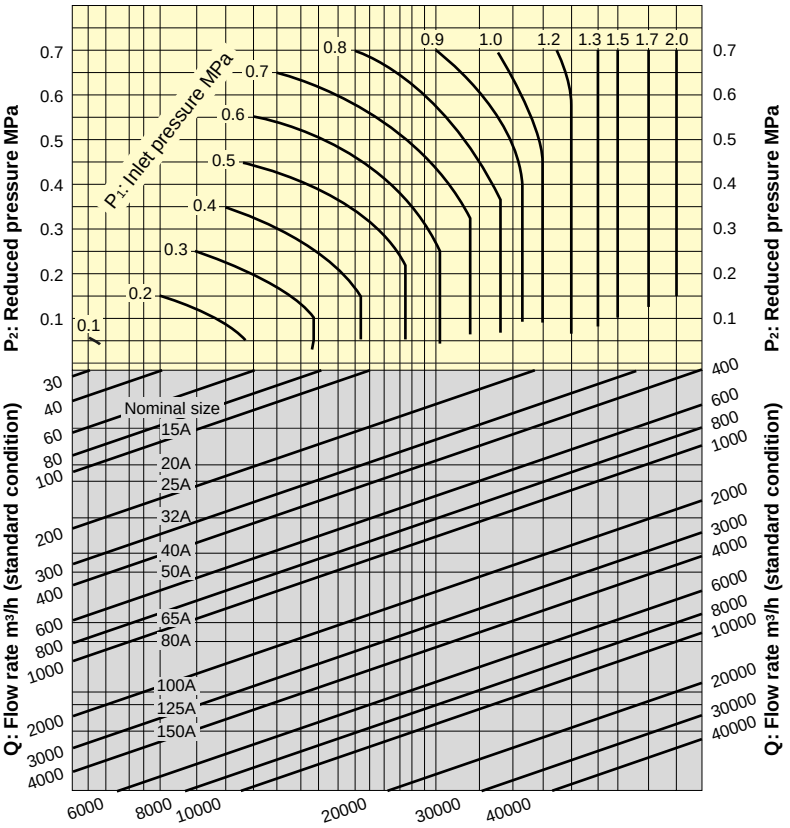

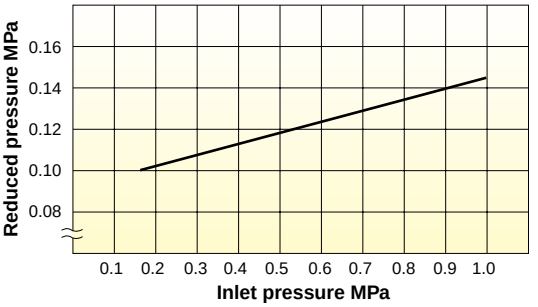

GD-200·GD-200H·GD-20 Flow Rate Table for Liquid

(m³/h)

P_1 (MPa)	P_2 (MPa)	15A	20A	25A	32A	40A	50A	65A	80A	100A	125A	150A
2.0	0.2-1.0	2.3	4.0	6.4	10.0	15.4	24.0	45.4	54.0	93.2	145.3	209.2
1.9	0.19-1.0	2.3	4.0	6.4	10.0	15.4	24.0	45.4	54.0	93.2	145.3	209.2
1.8	0.18-1.0	2.3	4.0	6.4	10.0	15.4	24.0	45.4	54.0	93.2	145.3	209.2
1.7	0.17-1.0	2.3	4.0	6.4	10.0	15.4	24.0	45.4	54.0	93.2	145.3	209.2
1.6	0.16-1.0	2.3	4.0	6.4	10.0	15.4	24.0	45.4	54.0	93.2	145.3	209.2
1.5	0.15-1.0	2.3	4.0	6.4	10.0	15.4	24.0	45.4	54.0	93.2	145.3	209.2
1.4	0.14-0.9	2.3	4.0	6.4	10.0	15.4	24.0	45.4	54.0	93.2	145.3	209.2
	1	2.3	4.0	6.4	10.0	15.4	24.0	45.4	54.0	93.2	130.0	187.1
1.3	0.15-0.8	2.3	4.0	6.4	10.0	15.4	24.0	45.4	54.0	93.2	145.3	209.2
	0.9	2.3	4.0	6.4	10.0	15.4	24.0	45.4	54.0	93.2	130.0	187.1
	1	2.3	4.0	6.4	10.0	15.4	24.0	42.0	54.0	93.2	112.5	162.1
1.2	0.12-0.7	2.3	4.0	6.4	10.0	15.4	24.0	45.4	54.0	93.2	145.3	209.2
	0.8	2.3	4.0	6.4	10.0	15.4	24.0	45.4	54.0	93.2	130.0	187.1
	0.9	2.3	4.0	6.4	10.0	15.4	24.0	42.0	54.0	93.2	112.5	162.1
	1	2.3	4.0	6.1	9.8	14.7	19.6	34.3	44.1	83.3	91.9	132.3
1.1	0.11-0.6	2.3	4.0	6.4	10.0	15.4	24.0	45.4	54.0	93.2	145.3	209.2
	0.7	2.3	4.0	6.4	10.0	15.4	24.0	45.4	54.0	93.2	130.0	187.1
	0.8	2.3	4.0	6.4	10.0	15.4	24.0	42.0	54.0	93.2	112.5	162.1
	0.9	2.3	4.0	6.1	9.8	14.7	19.6	34.3	44.1	83.3	91.9	132.3
	1	2.2	3.5	4.3	6.9	10.4	13.9	24.3	31.2	58.9	65.0	93.6
1	0.1-0.5	2.3	4.0	6.4	10.0	15.4	24.0	45.4	54.0	93.2	145.3	209.2
	0.6	2.3	4.0	6.4	10.0	15.4	24.0	45.4	54.0	93.2	130.0	187.1
	0.7	2.3	4.0	6.4	10.0	15.4	24.0	42.0	54.0	93.2	112.5	162.1
	0.8	2.3	4.0	6.1	9.8	14.7	19.6	34.3	44.1	83.3	91.9	132.3
	0.9	2.2	3.5	4.3	6.9	10.4	13.9	24.3	31.2	58.9	65.0	93.6
0.9	0.09-0.4	2.3	4.0	6.4	10.0	15.4	24.0	45.4	54.0	93.2	145.3	209.2
	0.5	2.3	4.0	6.4	10.0	15.4	24.0	45.4	54.0	93.2	130.0	187.1
	0.6	2.3	4.0	6.4	10.0	15.4	24.0	42.0	54.0	93.2	112.5	162.1
	0.7	2.3	4.0	6.1	9.8	14.7	19.6	34.3	44.1	83.3	91.9	132.3
	0.8	2.2	3.5	4.3	6.9	10.4	13.9	24.3	31.2	58.9	65.0	93.6
0.8	0.08-0.3	2.3	4.0	6.4	10.0	15.4	24.0	45.4	54.0	93.2	145.3	209.2
	0.4	2.3	4.0	6.4	10.0	15.4	24.0	45.4	54.0	93.2	130.0	187.1
	0.5	2.3	4.0	6.4	10.0	15.4	24.0	42.0	54.0	93.2	112.5	162.1
	0.6	2.3	4.0	6.1	9.8	14.7	19.6	34.3	44.1	83.3	91.9	132.3
	0.7	2.2	3.5	4.3	6.9	10.4	13.9	24.3	31.2	58.9	65.0	93.6
0.7	0.07-0.2	2.3	4.0	6.4	10.0	15.4	24.0	45.4	54.0	93.2	145.3	209.2
	0.3	2.3	4.0	6.4	10.0	15.4	24.0	45.4	54.0	93.2	130.0	187.1
	0.4	2.3	4.0	6.4	10.0	15.4	24.0	42.0	54.0	93.2	112.5	162.1
	0.5	2.3	4.0	6.1	9.8	14.7	19.6	34.3	44.1	83.3	91.9	132.3
	0.6	2.2	3.5	4.3	6.9	10.4	13.9	24.3	31.2	58.9	65.0	93.6
0.6	0.1	2.3	4.0	6.4	10.0	15.4	24.0	45.4	54.0	93.2	145.3	209.2
	0.2	2.3	4.0	6.4	10.0	15.4	24.0	45.4	54.0	93.2	130.0	187.1
	0.3	2.3	4.0	6.4	10.0	15.4	24.0	42.0	54.0	93.2	112.5	162.1
	0.4	2.3	4.0	6.1	9.8	14.7	19.6	34.3	44.1	83.3	91.9	132.3
	0.5	2.2	3.5	4.3	6.9	10.4	13.9	24.3	31.2	58.9	65.0	93.6
0.5	0.1	2.3	4.0	6.4	10.0	15.4	24.0	45.4	54.0	93.2	130.0	187.1
	0.2	2.3	4.0	6.4	10.0	15.4	24.0	42.0	54.0	93.2	112.5	162.1
	0.3	2.3	4.0	6.1	9.8	14.7	19.6	34.3	44.1	83.3	91.9	132.3
	0.4	2.2	3.5	4.3	6.9	10.4	13.9	24.3	31.2	58.9	65.0	93.6
0.4	0.1	2.3	4.0	6.4	10.0	15.4	24.0	42.0	54.0	93.2	112.5	162.1
	0.2	2.3	4.0	6.1	9.8	14.7	19.6	34.3	44.1	83.3	91.9	132.3
	0.3	2.2	3.5	4.3	6.9	10.4	13.9	24.3	31.2	58.9	65.0	93.6
0.3	0.1	2.3	4.0	6.1	9.8	14.7	19.6	34.3	44.1	83.3	91.9	132.3
	0.2	2.2	3.5	4.3	6.9	10.4	13.9	24.3	31.2	58.9	65.0	93.6
0.2	0.1	2.2	3.5	4.3	6.9	10.4	13.9	24.3	31.2	58.9	65.0	93.6
0.1	0.05	1.5	2.5	3.1	4.9	7.4	9.8	17.2	22.1	41.7	45.9	66.2

Features of Nylon 11 used for GD-200 Series

○ Water absorption is low, and wear resistance is excellent.
○ Nylon 11 is applicable to food-related equipment because it is nontoxic (it is accepted by FDA).
○ Seawater resistance and critical atmosphere resistance are very good.
○ Outdoor weather resistance is outstanding.
○ Chemical resistance is great.
○ Heat resistance and hot water resistance are fine.
○ Electric insulation and sound damping performance are superb.

●Characteristic comparison of powder coating film

Characteristics \ Coating	Nylon 11	Epoxy	Acrylic	Polyester	Polyethylene	PVC (Polyvinyl chloride)
Specific gravity	1.04-1.1	1.3-1.6	1.3-1.6	1.3-1.6	1.0	1.3
Hardness (Pencil hardness)	F	2H	H	H	HB	B
Maximum working temperature (˚C)	100-130	100-150	100-120	100-170	70-80	70-80
Wear resistance	◎	○	△	△	△	△
Impact resistance	◎	○	△	△	△	◎
Adhesion	◎	○	○	○	△	△
Low-temperature characteristics	◎-50˚C	○	○	○	○	×
Weather resistance	○	×	◎	○	△	○
Alkali resistance	◎	○	○	△	○	○
Acid resistance	△	○	○	○	◎	◎
Solvent resistance	◎	◎	×	◎	△	×
Salt water resistance	◎	○	△	○	○	○

[Meanings of symbols] ◎: excellent, ○: good, △: care required in use, ×: unacceptable
・Note that the table above shows the features of Nylon 11 and does not describe the working conditions of the GD-200 Series.

Features of Nylon 11

Item		Measured value
Melting point		184-186˚C
Specific gravity (20˚C)		1.04
Coefficient of friction		0.18
*Tensile strength (ASTM D 638)		40-48 MPa
*Elongation (within Elastic limit)(ASTM D 638)		18-34%
Hardness (shore D, Film thickness 5 mm, 20˚C)		75
*Impact resistance test 〈50 cm height falling of hemishperical weight (ϕ 25 mm x 2 kg)〉		No peeling
*Bending test 〈JIS K 5400 (180 degree twist around ϕ 10 mm rod)〉		No crack, No peeling
*Wear resistance test 〈Wear amount after 1000 revolutions of Taber tester (CS-17 griding wheel,1 kg load)〉		5-8 mg
*Erichsen test (JIS Z 2247 B)		10 mm, No crack
Thermal conductivity (under the condition of 50-170˚C)		29.4 x 10^{-4} J/g/˚C
Coefficient of linear expansion (under the condition of -20 – 100˚C)		15 x 10^{-5}
Specific heat		2.1 J/g/˚C
Volume resistivity 〈ASTM D 257 (20˚C, 65%RH, 500 V)〉		3.5 x 10^{14} Ω/cm²/cm
Salt spray test (ASTM D 117)		Not particular for 2 thousands hour
*Water absorption	Under the conditions of 20˚C and 100%RH	1.6-2.6%
	immersed in boiling water, 100˚C	2.4-3%
*Immersion test	5% NaCl 70˚C x 3 days	1.8volume%, 2.6weight%
	10% NaOH 70˚C x 3 days	4.1volume%, 4.9weight%
	Gasoline Room temperature x 30 days	1.5volume%, 1.7weight%
	Insulating oil Room temperature x 30 days	2.5volume%, 1.9weight%

(Note) The asterisk (*) mark indicates a measured value obtained from a test piece coated to a film thickness of 300 μm by fluidization dip coating, and the above information in parentheses is a test method.

GD-24・24B

	-	
	-	
	10:1	
	5-80	

- If a large capacity is required, valves can be installed in parallel.

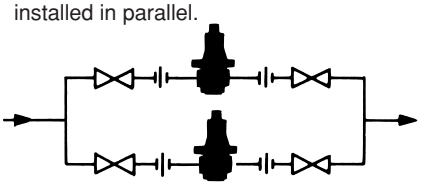

Valves
Valves
Valves

Nominal size	d	L	H	H_1	Weight
15A	Rc 1/2	80	193	42	1.8
20A	Rc 3/4	90	210	45	2.4
25A	Rc 1	100	230	50	3.3
32A	Rc 1-1/4	120	265	60	4.7
40A	Rc 1-1/2	150	315	62	8.2
50A	Rc 2	185	365	73	14.3

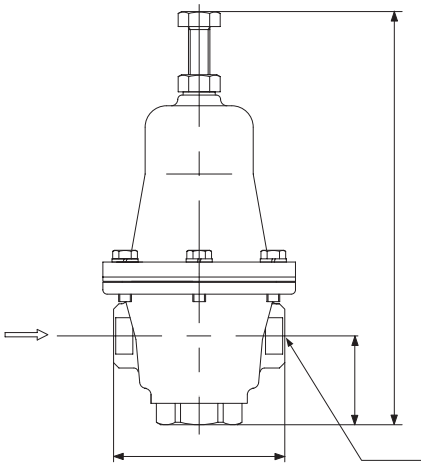

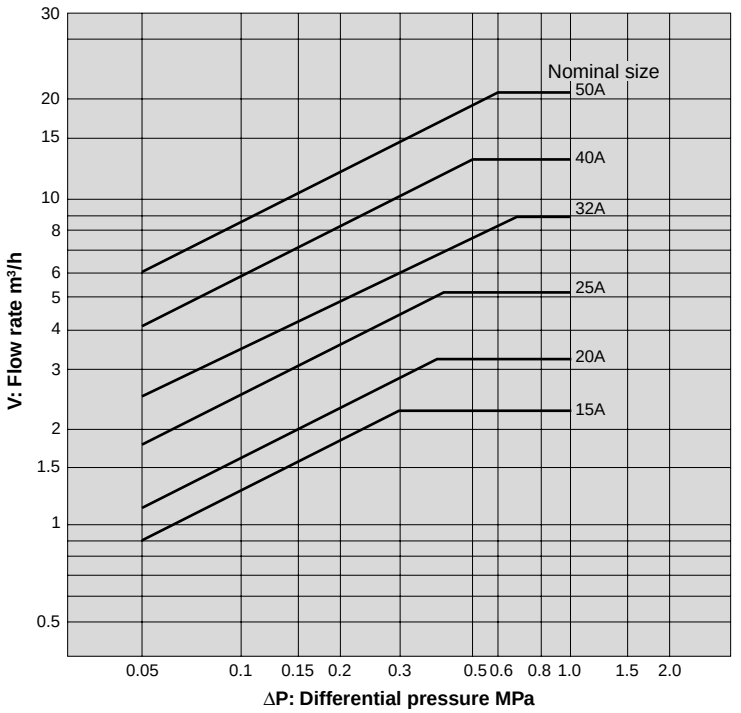
Nominal size
50A
40A
32A
25A
20A
15A
V: Flow rate m³/h
30
20
15
10
8
6
5
4
3
2
1.5
1
0.5
0.05
0.1
0.15
0.2
0.3
0.5
0.6
0.8
1.0
1.5
2.0
ΔP: Differential pressure MPa

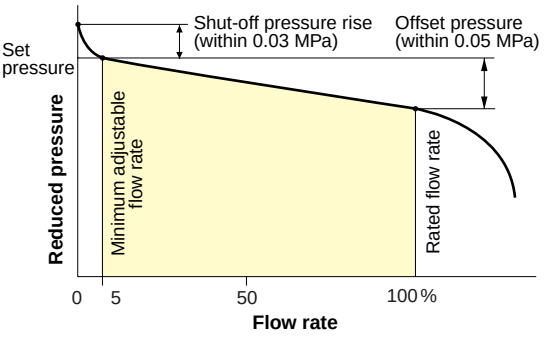
Shut-off pressure rise
(within 0.03 MPa)
Offset pressure
(within 0.05 MPa)
Set
pressure
Reduced pressure
Minimum adjustable
flow rate
Rated flow rate
0
5
50
100%
Flow rate

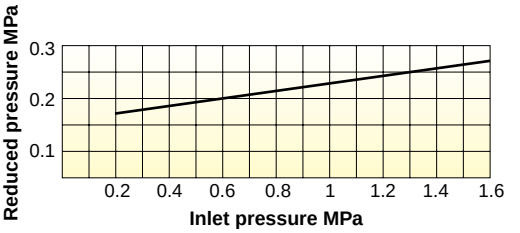
Reduced pressure MPa
0.3
0.2
0.1
0.2
0.4
0.6
0.8
1
1.2
1.4
1.6
Inlet pressure MPa

GD-26-N Series

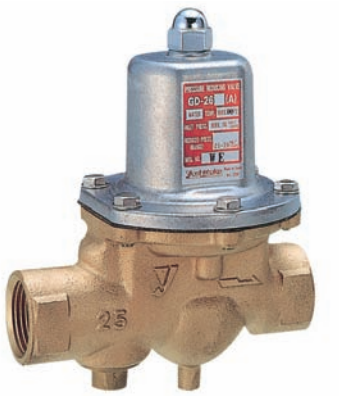

GD-26-N・28-N

GD-27-N・29-N

Features

1. Wetted parts are made of corrosion-resistant material to prevent rusty water.
2. Reduced noise.
3. Pressure balance structure can keep the reduced pressure at a constant level without being affected by inlet pressure.
4. Closed structure keeps fluid inside even if the diaphragm is damaged or broken.
5. Maintenance and inspection can be conducted easily by disassembling the upper side only.
6. Compact and lightweight design makes piping works easy.

Specifications

Model		GD-26-N	GD-27-N	GD-28-N	GD-29-N
Application		Cold and hot water			
Inlet pressure		1.0 MPa or less		1.6 MPa or less	
Reduced pressure		(A) 0.05-0.35 MPa (B) 0.3-0.7 MPa	25A-100A (A) 0.05-0.35 MPa (B) 0.3-0.7 MPa 125A-150A (A) 0.05-0.2 MPa (B) 0.2-0.5 MPa	(A) 0.05-0.35 MPa (B) 0.3-0.7 MPa	
Minimum differential pressure		0.05 MPa			
Maximum pressure reduction ratio		10:1			
Application temperature		5-90˚C	25A-100A 5-90˚C 125A-150A 5-80˚C *	5-90˚C	
Material	Body	Cast bronze (NPb-treated)			
	Valve seat	Cast bronze (NPb-treated)			
	Valve disc	EPDM	25A-100A EPDM 125A-150A NBR	EPDM	
	Diaphragm	EPDM	25A-100A EPDM 125A-150A NBR	EPDM	
Connection		JIS Rc screwed	JIS 10K FF flanged	JIS Rc screwed	JIS 16K FF flanged

* Available with the GD-27F withstanding 90˚C, of 125A and 150A.
・A strainer (40 mesh) is incorporated in 15A to 50A.
・Pressure gauge connection port is JIS Rc 1/8 (for 40 ϕ, 1.0 MPa).
・Available with pipe end core (GD-26L-N, maximum temperature: 40˚C)
・Avoid use of 125A and 150A under differential pressure of more than 0.8 MPa.

Dimensions (mm) and Weights (kg)

●GD-26-N and GD-28-N

Nominal size	d	L	H	H_1	Weight
15A	Rc 1/2	115	159.5	37.5	1.6
20A	Rc 3/4	120	159.5	38.5	1.7
25A	Rc 1	135	170	41	2.1
32A	Rc 1-1/4	180	224	57	4.0
40A	Rc 1-1/2	180	224	57	4.4
50A	Rc 2	200	239.5	61	6.5

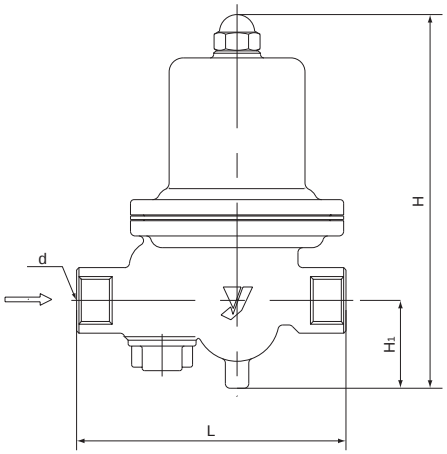

GD-26-N
GD-28-N

●GD-27-N and GD-29-N

Nominal size	L	H	H_1	Weight
25A	160	170	41	5.1
32A	200	224	57	7.5
40A	200	224	57	7.7
50A	220	239.5	61	10.9
65A	220	329	77	20.0
80A	230 (234)	345	82	22.0 (24.0)
100A	270 (278)	412	94	33.0 (36.5)
125A	360	771	148	90.0
150A	380	771	148	97.0

- The above values in parentheses are the dimension and weights of the GD-29-N.
- The above values of 125A and 150A are only for the GD-27-N.

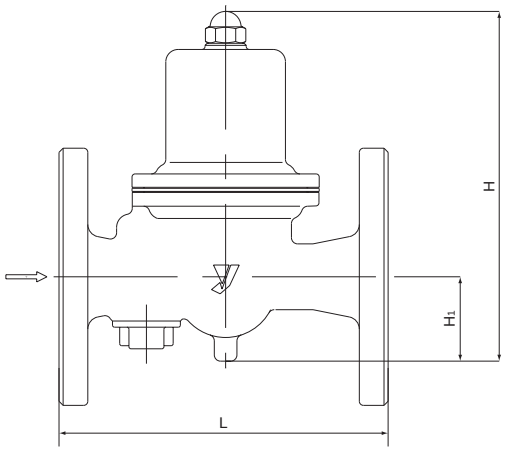

GD-27-N
GD-29-N
25A-50A

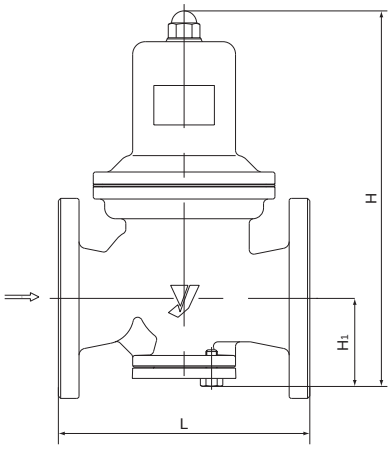

GD-27-N
GD-29-N
65A-100A

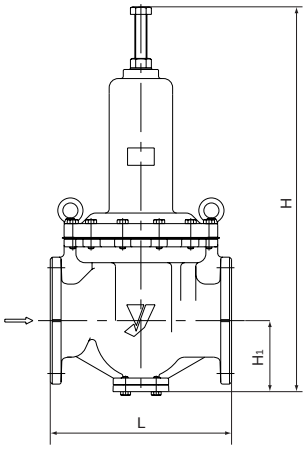

GD-27-N
125A-150A

GD-26S Series

Features

1. Wetted parts are made of corrosion-resistant material to prevent rusty water.
2. Reduced noise.
3. Pressure balance structure can keep the reduced pressure at a constant level without being affected by inlet pressure.
4. Closed structure keeps fluid inside even if the diaphragm is damaged or broken.
5. Maintenance and inspection can be conducted easily by disassembling simply from the upper side.
6. Compact and lightweight design makes piping works easy.

GD-26S・28S

GD-27S・29S

Specifications

Model		GD-26S	GD-27S	GD-28S	GD-29S
Application		Cold and hot water			
Inlet pressure		1.0 MPa or less		1.6 MPa or less	
Reduced pressure		(A) 0.05-0.35 MPa (B) 0.3-0.7 MPa			
Minimum differential pressure		0.05 MPa			
Maximum pressure reduction ratio		10:1			
Application temperature		5-90˚C			
Material	Body	Cast stainless steel			
	Valve seat	Cast stainless steel			
	Valve disc	EPDM			
	Diaphragm	EPDM			
Connection		JIS Rc screwed	JIS 10K FF flanged	JIS Rc screwed	JIS 16K FF flanged

・A strainer (40 mesh) is incorporated in 15A to 50A.
・Pressure gauge connection port is JIS Rc 1/4.
・Available with FKM.

Dimensions (mm) and Weights (kg)

●GD-26S and GD-28S

Nominal size	d	L	H	H_1	Weight
20A	Rc 3/4	135	170	41	2.2
25A	Rc 1	135	170	41	2.2
32A	Rc 1-1/4	180	224	57	4.7
40A	Rc 1-1/2	180	224	57	4.5
50A	Rc 2	200	239.5	61	6.5

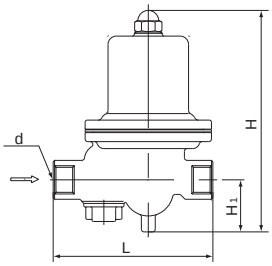

GD-26S・GD-28S

●GD-27S and GD-29S

Nominal size	L	H	H_1	Weight
20A	160	170	41	3.9
25A	160	170	41	4.8
32A	200	224	57	8.0
40A	200	224	57	8.3
50A	220	239.5	61	10.8
65A	220	329	77	20.6
80A	230 (234)	345	82	22.0 (25.0)
100A	270 (278)	412	94	34.5 (36.5)

・The values in parentheses are the dimensions and weights of the GD-29S.

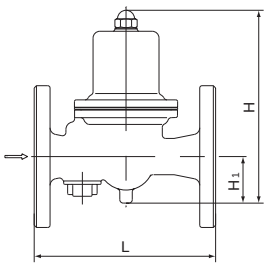

GD-27S・GD-29S
25A-50A

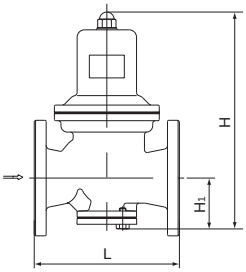

GD-27S・GD-29S
65A-100A

●

〔 〕

Nominal size	15A	20A	25A	32A	40A	50A	65A	80A	100A	125A	150A
Rated flow rate L/min	30	40	60	100	150	250	300	450	700	1,600	1,800

•

●

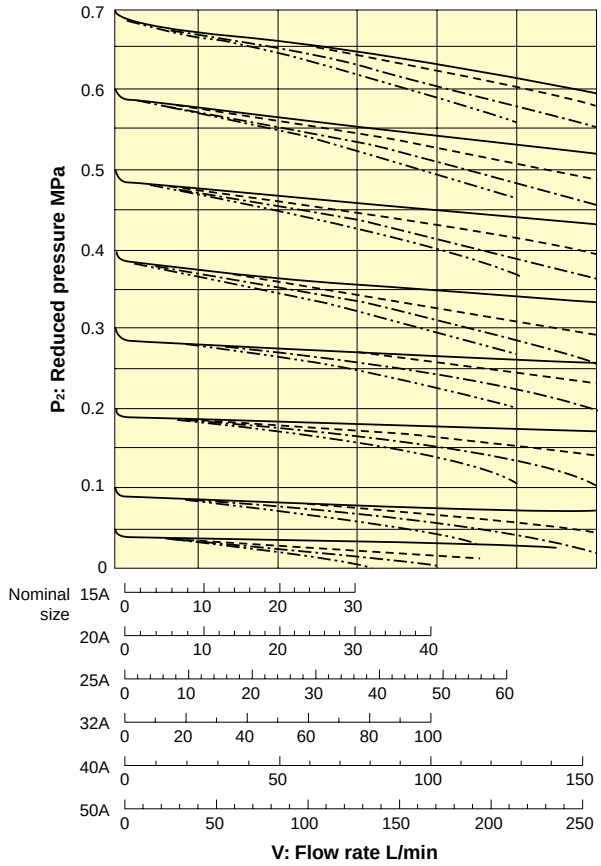

●

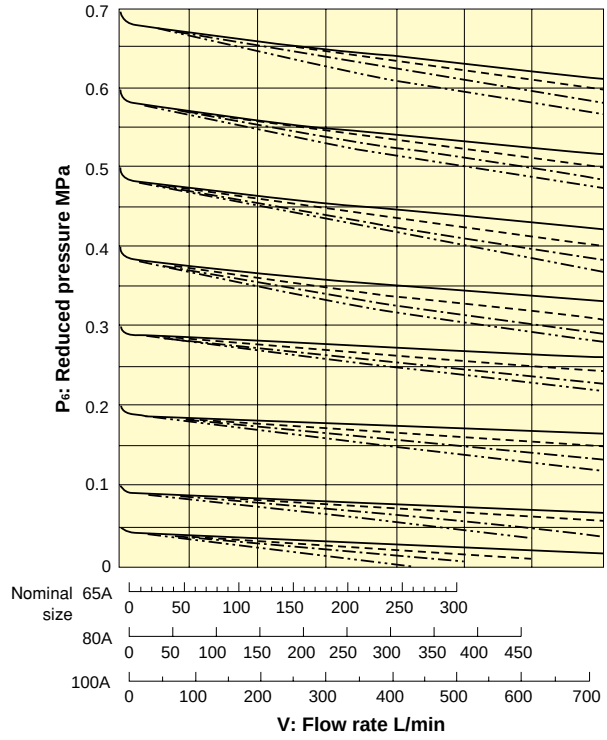

Inlet pressure ——— 1.0 to 1.6 MPa
- - - - - - Reduced pressure + 0.2 MPa
—·—·— Reduced pressure + 0.1 MPa
—··—··— Reduced pressure + 0.05 MPa

●

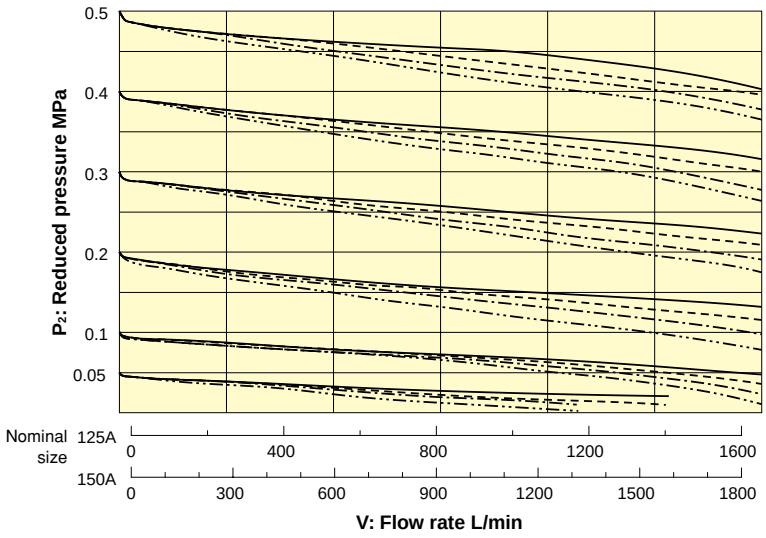

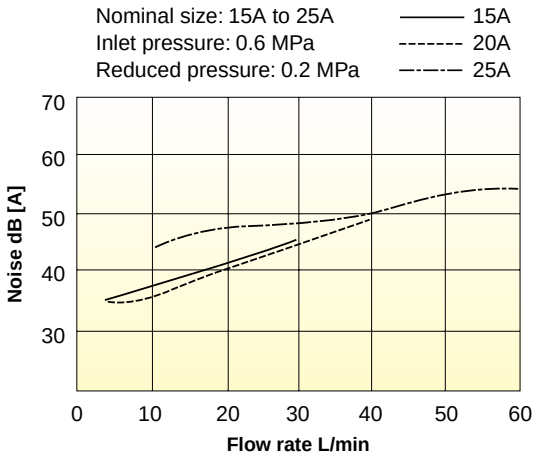

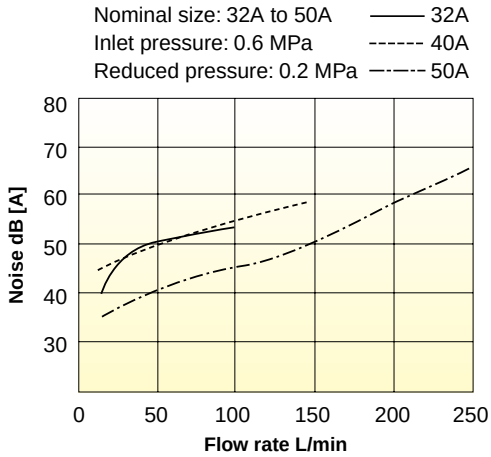

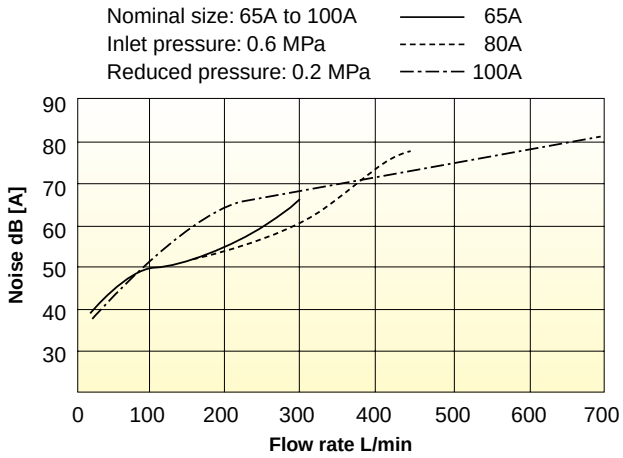

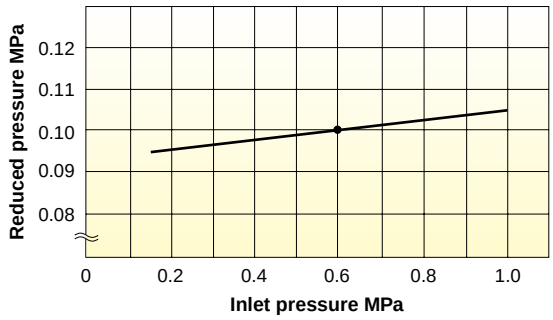

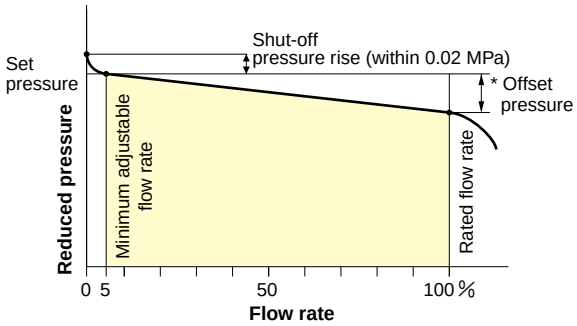

Nominal size	Pressure range	Reduced pressure range	Offset pressure
15-100A	A	0.05-0.35 MPa	Within 0.05 MPa
	B	0.3-0.7 MPa	Within 0.10 MPa
125,150A	A	0.05-0.20 MPa	Within 0.07 MPa
	B	0.2-0.5 MPa	Within 0.12 MPa

GD-46 Series

The GD-46 Series water pressure reducing valve enables to shorten a construction work period since water pressure inspection can be performed easily by turning the cap upside down with the valve installed.

Features

1. Reduced noise. Can be used even late at night.
2. Water pressure inspection can be performed easily by turning the cap upside down with the valve installed.
3. Pressure balance structure can keep the reduced pressure at a constant level without being affected by inlet pressure.
4. Attached pressure gauge joint allows a pressure gauge to be installed while water is supplied so that the set pressure can be checked easily.
5. Noise characteristics and flow characteristics conform to the "Quality Criterion on Materials" of Urban Renaissance Agency in Japan.

GD-46PP

GD-46LL・GD-46KK

Specifications

Nominal size		20A
Application		City water
Inlet pressure		1.0 MPa or less
Reduced pressure		(A) 0.05-0.10 MPa〔Standard setting: 0.09 MPa〕
		(B) 0.10-0.22 MPa〔Standard setting: 0.20 MPa〕
		(C) 0.20-0.30 MPa〔Standard setting: 0.25 MPa〕
Minimum differential pressure		0.02 MPa
Maximum pressure reduction ratio		10:1
Working temperature	Without pipe end core	5-90˚C
	Equipped with pipe end core	5-40˚C
	Equipped with check valve	5-60˚C
Minimum adjustable flow rate		0.5 L/min
Rated flow rate	Without check valve	50 L/min (Differential pressure before and after valve: 0.10 MPa or more)
	Equipped with check valve	30 L/min (Differential pressure before and after valve: 0.10 MPa or more)
Material	Body	Cast bronze (NPb-treated)
	Spindle	Dezincification resistant material
	Valve disc	FKM
	Diaphragm	FKM
Pressure check function		Pressure gauge joint (JIS Rc 1/8 screwed)
Outlet withstand pressure		0.36 MPa (at pressure reducing valve function)

・Available with pressure gauge (type A or type D) as an optional extra (for 0.5 MPa).
・The accuracy of a pressure gauge is ±3% F.S.
・The strainer is 60 mesh.
・The product is set to the pressure reducing valve function when it is delivered from our plant.
・An incombustible material is used for heat insulating material.

Model	Connection Inlet × outlet	L	Weight
GD-46	G 1 × G 1	—	1.0
GD-46PP・46PPC	R 3/4 × R 3/4	218	1.4
GD-46KK・46KKC・46LL・46LLC	Rc 3/4 × Rc 3/4	214	1.5
GD-46PK・46PKC・46PL・46PLC	R 3/4 × Rc 3/4	216	1.4
GD-46KP・46KPC・46LP・46LPC	Rc 3/4 × R 3/4	216	1.4
GD-46PG	R 3/4 × G 1-3/4	165	1.2
GD-46GP・46GPC	G 1 × R 3/4	165	1.2
GD-46KG・46LG	Rc 3/4 × G 1	163	1.2
GD-46GK・46GKC・46GL・46GLC	G 1 × Rc 3/4	163	1.2
GD-46SG	Rc 3/4 × G 1	194.5	1.4
GD-46SP・46SPC	Rc 3/4 × R 3/4	247.5	1.6
GD-46SL・46SLC・46SK・46SKC	Rc 3/4 × Rc 3/4	245.5	1.6

〔　　〕

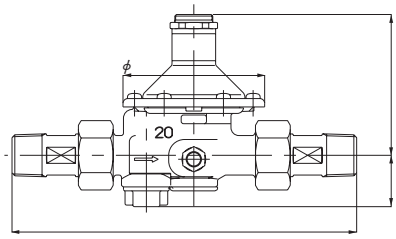

〔　　〕

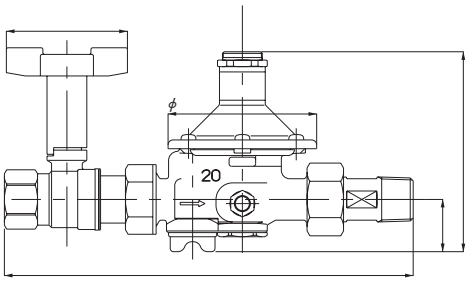

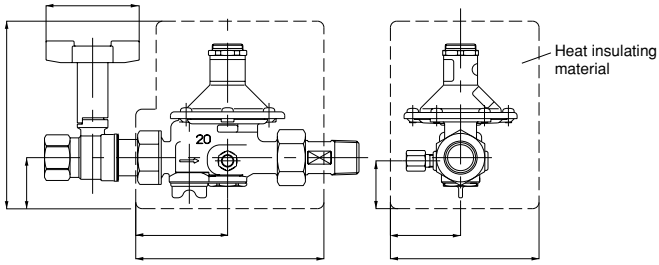

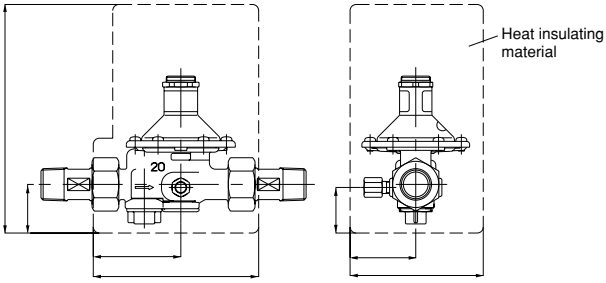

Note) The heat insulating material is common to all GD-46 Series valves. However, no heat insulating material is used for the water stop valve.

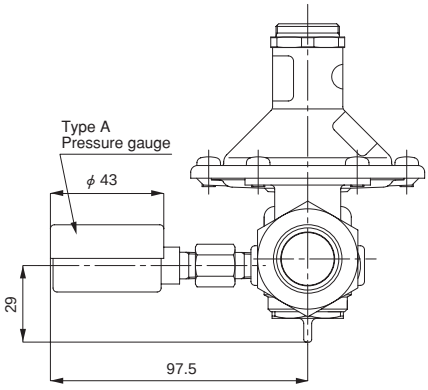

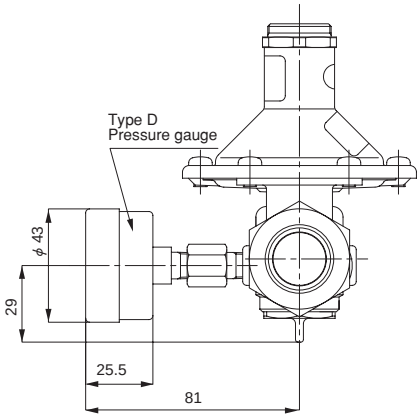

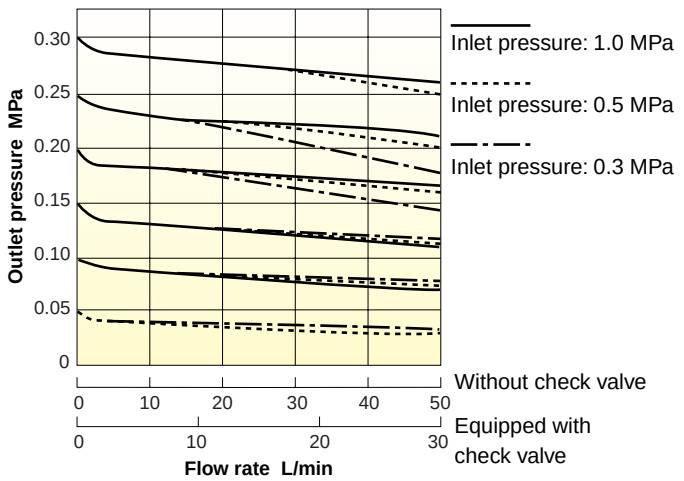

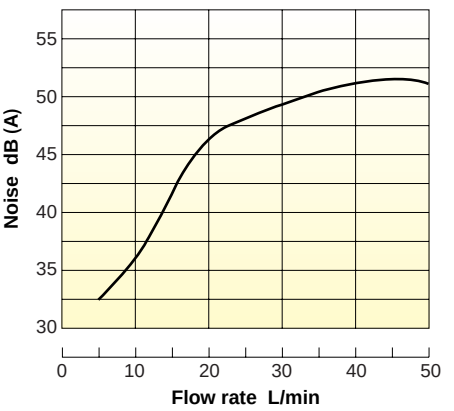

〈Test conditions〉

- Inlet pressure: 0.6 MPa
- Reduced pressure: 0.2 MPa
- Distance from the sample valve to the microphone: 15 cm
- Background noise: 30 dB (A)
  (Except for the valve equipped with a check valve)

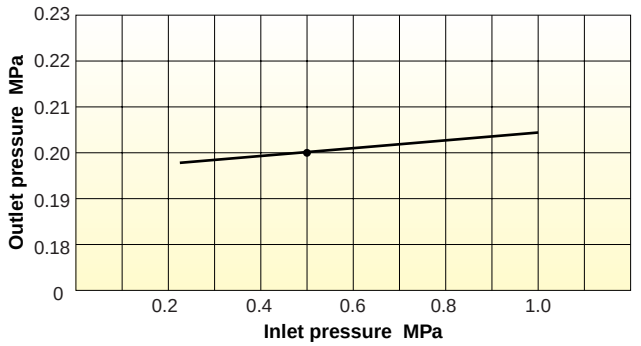

This chart shows variation in reduced pressure when the inlet pressure of 0.5 MPa is changed between 0.22 MPa and 1.0 MPa while the reduced pressure is set at 0.2 MPa.

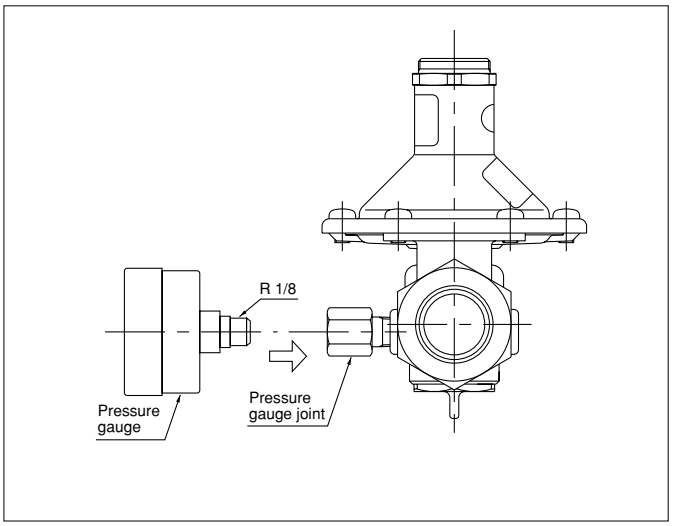

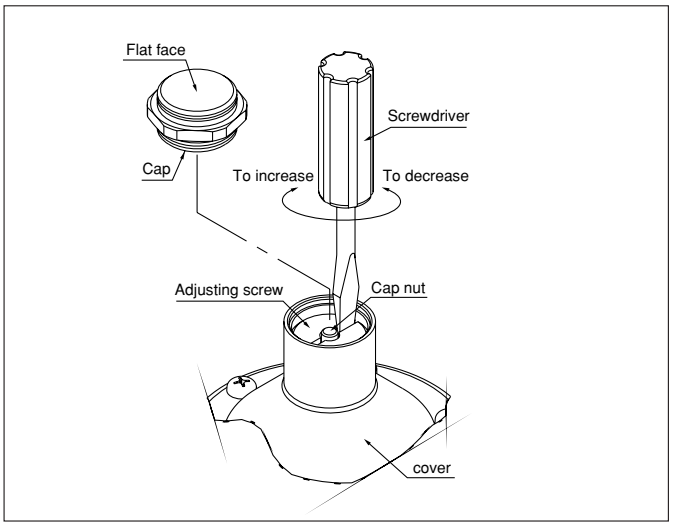

-
-

GD-38 Series

The GD-38 Series is a bypass equipped water pressure reducing valve for individual water supply to complex housing, and does not require substitute piping.
Water washing of piping and water pressure inspection can be performed by turning the spring case with the reducing valve installed. For labor saving and resource saving, no accessory parts required.

GD-38PP・GD-38VV

GD-38LL

GD-38SP

Features

1. Reduced noise. Can be used even late at night.
2. Pressure balance structure can keep the reduced pressure at a constant level without being affected by inlet pressure.
3. Bypass function allows water pressure inspection to be performed easily with the valve installed to significantly shorten a construction work period.
4. Cartridge system is used for the pressure reducing function, making maintenance and inspection easy.
5. Closed structure keeps fluid from flowing to outside even if the diaphragm is damaged or broken.
6. Attached pressure gauge joint allows a pressure gauge to be installed while water is supplied so that the set pressure can be checked easily.

Specifications

Nominal size		20A
Application		City water
Inlet pressure		1.0 MPa or less
Reduced pressure		(A) 0.05-0.10 MPa〔Standard setting: 0.09 MPa〕
		(B) 0.10-0.22 MPa〔Standard setting: 0.20 MPa〕
		(C) 0.20-0.30 MPa〔Standard setting: 0.25 MPa〕
Minimum differential pressure		0.05 MPa
Maximum pressure reduction ratio		10:1
Working temperature	Without pipe end core	5-90˚C
	Equipped with pipe end core	5-40˚C
	Equipped with check valve	5-60˚C
Minimum adjustable flow rate		0.5 L/min
Rated flow rate	Without check valve	70 L/min (Differential pressure before and after valve: 0.10 MPa or more)
	Equipped with check valve	30 L/min (Differential pressure before and after valve: 0.10 MPa or more)
Material	Body	Cast bronze (NPb-treated)
	Valve seat	Cast bronze (NPb-treated)
	Spindle	Brass
	Valve disc	EPDM
	Diaphragm	EPDM
Pressure check function		Pressure gauge joint (JIS Rc 1/8 screwed)
Outlet withstand pressure		0.36 MPa (at pressure reducing valve function)

・Available with pressure gauge (type A or type D) as an optional extra (for 0.5 MPa).
・The strainer is 60 mesh.
・The accuracy of a pressure gauge is ±3% F.S.
・The product is set to the "bypass" position when it is delivered from our plant.
・An incombustible material is used for heat insulating material.

Dimensions (mm) and Weights (kg)

Model	Connection Inlet × outlet	L	Weight
GD-38	G 1 × G 1	—	1.4
GD-38VV・38VVC・38PP・38PPC	R 3/4 × R 3/4	218	1.8
GD-38KK・38KKC・38LL・38LLC	Rc 3/4 × Rc 3/4	214	1.9
GD-38VK・38VKC・38VL・38VLC	R 3/4 × Rc 3/4	216	1.8
GD-38PK・38PKC・38PL・38PLC	R 3/4 × Rc 3/4	216	1.8
GD-38KV・38KVC・38LV・38LVC	Rc 3/4 × R 3/4	216	1.8
GD-38KP・38KPC・38LP・38LPC	Rc 3/4 × R 3/4	216	1.8
GD-38VG・38PG	R 3/4 × G 1	165	1.6
GD-38GV・38GVC・38GP・38GPC	G 1 × R 3/4	165	1.6
GD-38KG・38LG	Rc 3/4 × G 1	163	1.6
GD-38GK・38GKC・38GL・38GLC	G 1 × Rc 3/4	163	1.6
GD-38SG	Rc 3/4 × G 1	193.5	1.8
GD-38SP・38SPC・38SV・38SVC	Rc 3/4 × R 3/4	246.5	2.0
GD-38SL・38SLC・38SK・38SKC	Rc 3/4 × Rc 3/4	244.5	2.0

〔GD-38 Series〕

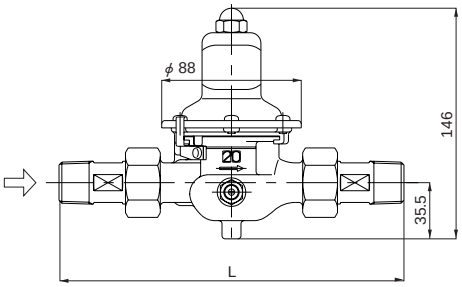

Dimensions of the Heat Insulating Material

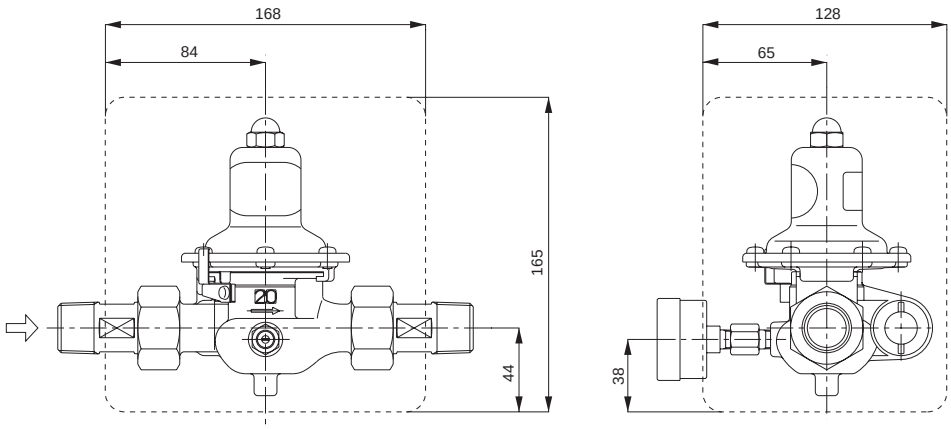

Dimensions of the Valve Equipped with the Optional Pressure Gauge

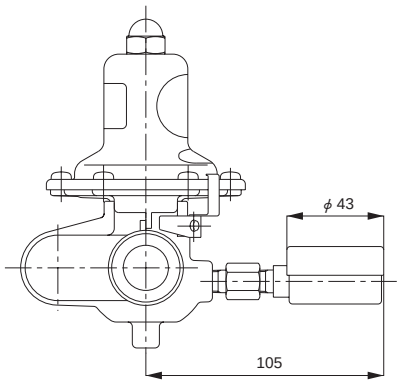

Equipped with the pressure gauge Type A

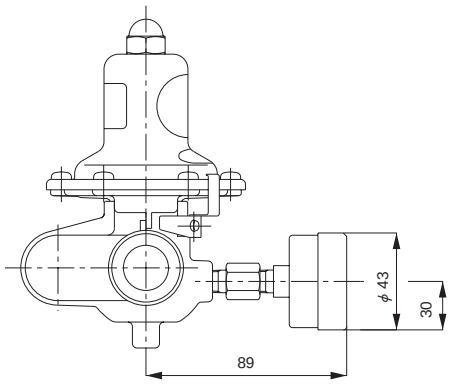

Equipped with the pressure gauge Type D

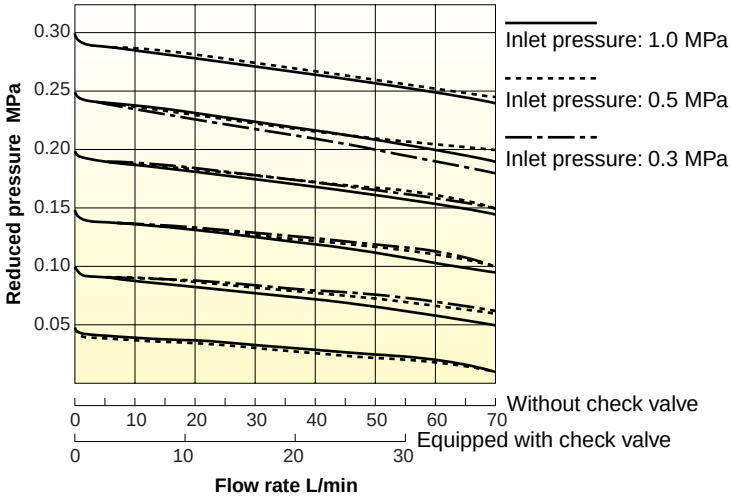

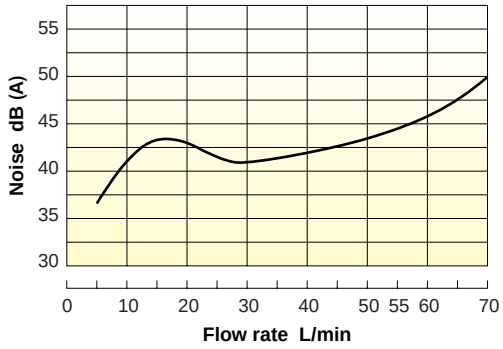

- Inlet pressure: 0.6 MPa
- Reduced pressure: 0.2 MPa
- Distance from the sample valve to the microphone: 15 cm
- Background noise: 30 dB (A)

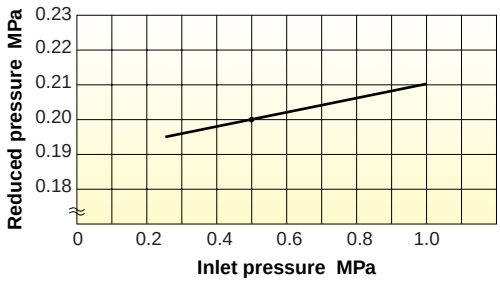

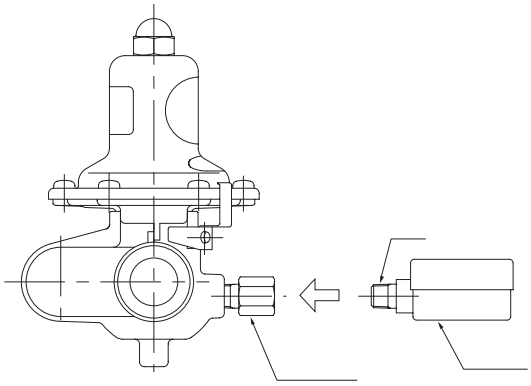

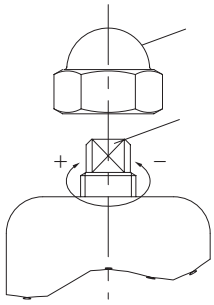

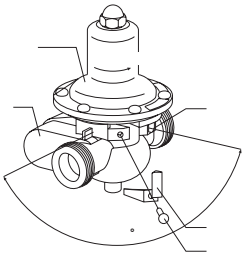

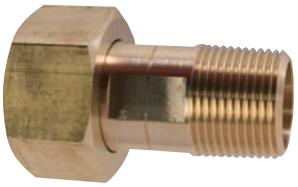

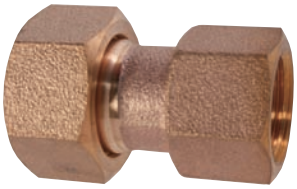

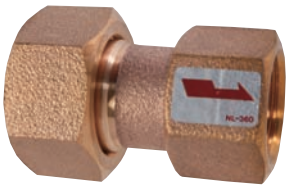

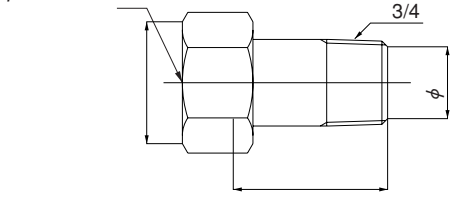
3/4

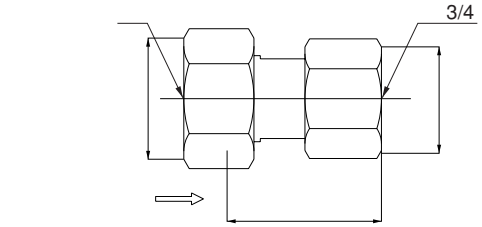
3/4

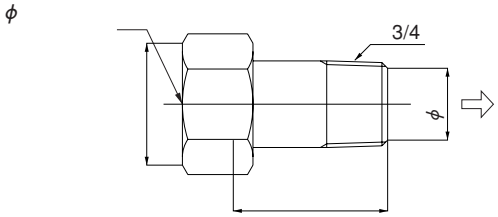
3/4

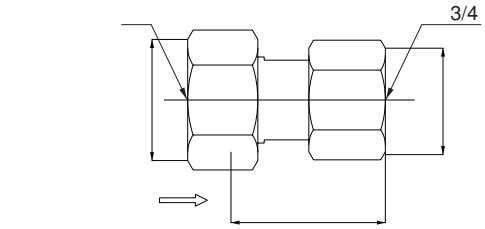
3/4

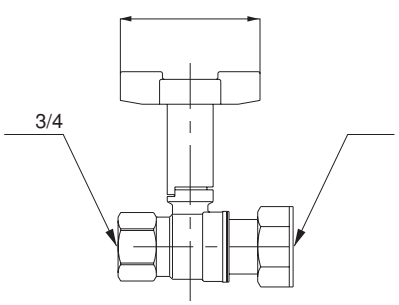
3/4

GD-25GJ・25JC・25GJ-K

The GD-25 Series achieves low-noise water supply as pressure reducing valves for individual water supply to complex housing. Reduced pressure can be kept highly stable against a variation of supply water pressure. Incorporated strainer and its compact and lightweight design ensure easy handling of piping.

GD-25GJ・25JC

Features

1. Reduced noise. Can be used even late at night.
2. Pressure balance structure can keep the reduced pressure at a constant level without being affected by inlet pressure.
3. Incorporated strainer prevents foreign substances such as dirt and sand from flowing to the outlet side.
4. Attached pressure gauge joint allows a pressure gauge to be installed while water is supplied so that the set pressure can be checked easily.
5. The GD-25JC incorporates check valve and the GD-25GJ-K(P) is provided with built-in pipe end core for lining steel piping.

Specifications

Model		GD-25GJ	GD-25JC	GD-25GJ-K	GD-25GJ-K(P)
Nominal size		25A			
Application		City water			
Inlet pressure		1.0 MPa or less			
Reduced pressure		(A) 0.05-0.10 MPa〔Standard setting: 0.09 MPa〕			
		(B) 0.10-0.22 MPa〔Standard setting: 0.20 MPa〕			
		(C) 0.20-0.35 MPa〔Standard setting: 0.25 MPa〕			
Minimum differential pressure		0.02 MPa			
Maximum pressure reduction ratio		10:1			
Minimum adjustable flow rate		0.5 L/min			
Fluid temperature		5-90˚C			5-40˚C
Rated flow rate		85 L/min (100 L/min when the differential pressure is 0.10 MPa or more)			
Material	Body	Cast bronze (NPb-treated)			
	Valve seat	Cast bronze (NPb-treated)			
	Spindle	Brass			
	Valve disc	FKM			
	Diaphragm	EPDM			
Connection		JIS R 1 screwed (union joint)		JIS Rc 1 screwed (union joint)	
Pressure gauge joint		JIS Rc 1/8 screwed			
Outlet withstand pressure		0.42 MPa			

- The strainer is 40 mesh.
- Available with pressure gauge (type A or type D) as optionale extra (for 0.5 MPa).
- The accuracy of a pressure gauge is ±3% F.S.
- The closing pressure of the check valve for the GD-25JC is 0.005 MPa or less.
- An incombustible material is used for heat insulating material.

Dimensions (mm) and Weights (kg)

Model	d	L	L_1	H	H_1	Weight
GD-25GJ GD-25JC	R 1	252	136	186	46	3.5
GD-25GJ-K GD-25GJ-K(P)	Rc 1	250				3.9

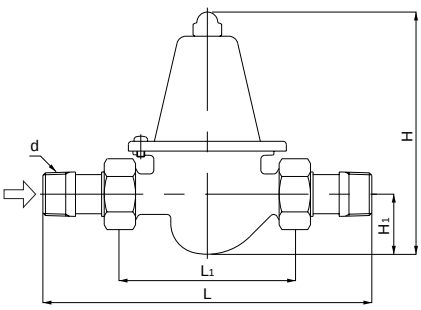

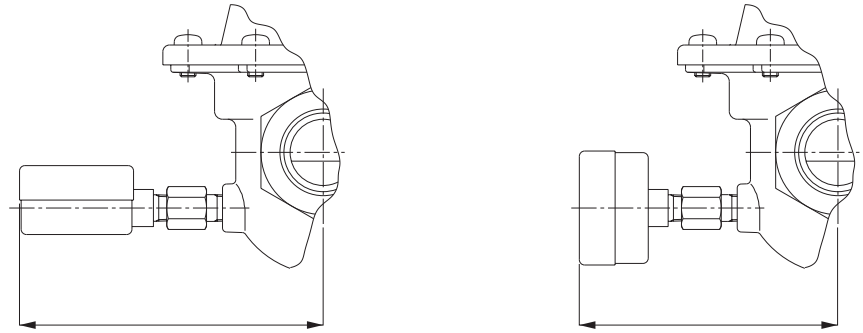

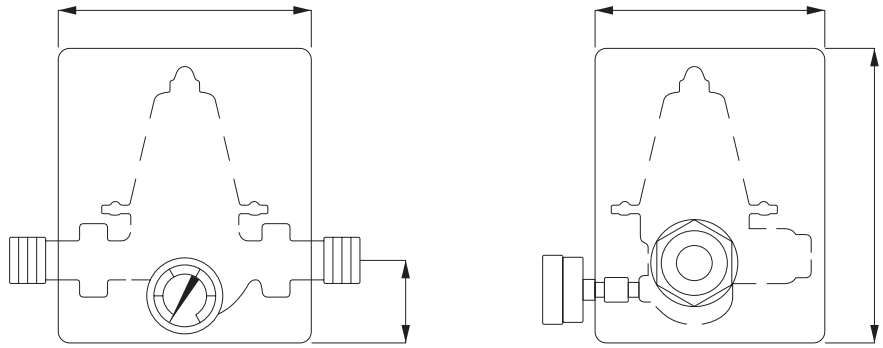

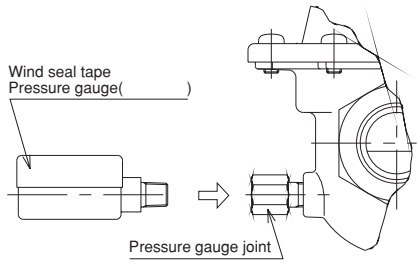
Wind seal tape
Pressure gauge( )
Pressure gauge joint

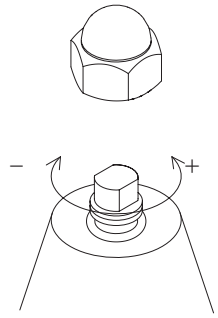
−
+

●

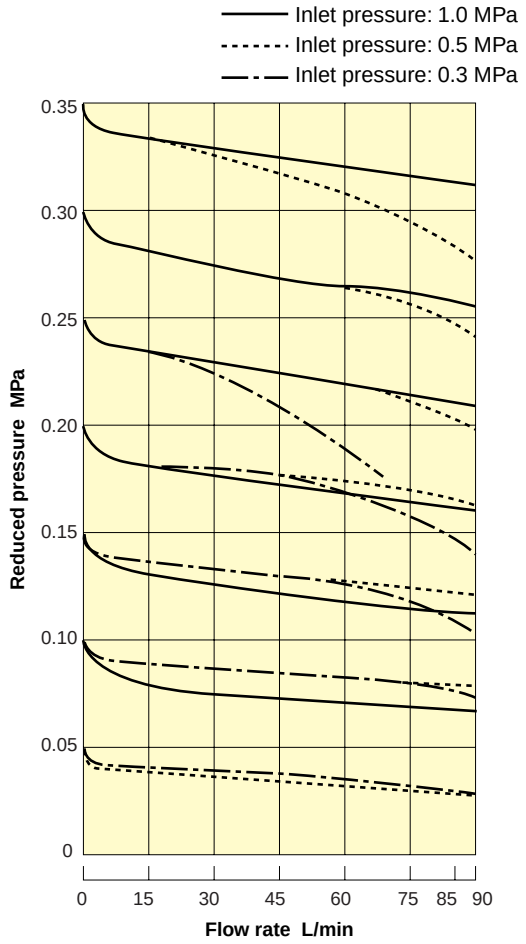
Inlet pressure: 1.0 MPa
Inlet pressure: 0.5 MPa
Inlet pressure: 0.3 MPa
Reduced pressure MPa
0.35
0.30
0.25
0.20
0.15
0.10
0.05
0
0
15
30
45
60
75
85
90
Flow rate L/min

●

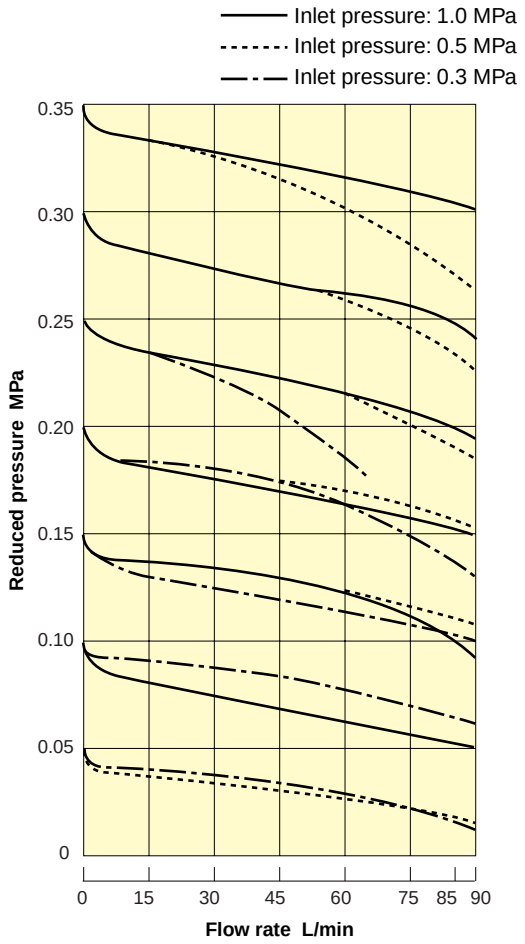
Inlet pressure: 1.0 MPa
Inlet pressure: 0.5 MPa
Inlet pressure: 0.3 MPa
Reduced pressure MPa
0.35
0.30
0.25
0.20
0.15
0.10
0.05
0
0
15
30
45
60
75
85
90
Flow rate L/min

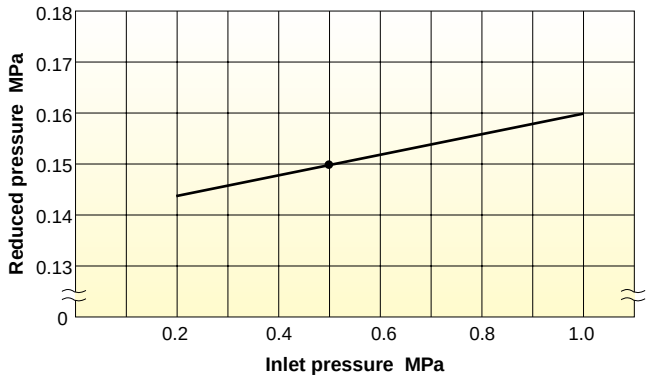
Reduced pressure MPa
0.18
0.17
0.16
0.15
0.14
0.13
0
0.2
0.4
0.6
0.8
1.0
Inlet pressure MPa

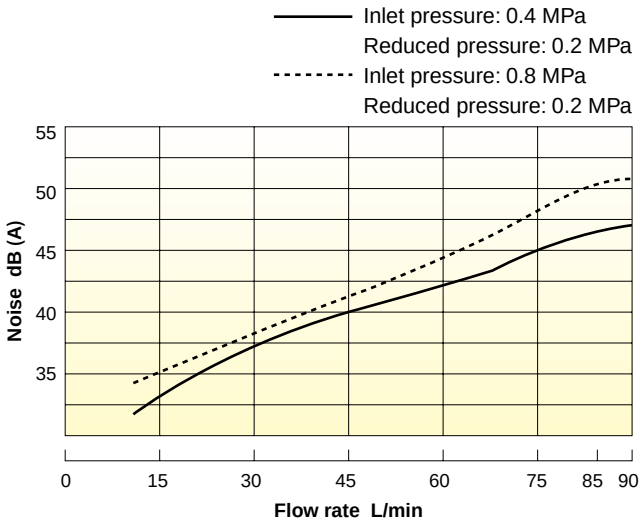
Inlet pressure: 0.4 MPa
Reduced pressure: 0.2 MPa
Inlet pressure: 0.8 MPa
Reduced pressure: 0.2 MPa
Noise dB (A)
55
50
45
40
35
0
15
30
45
60
75
85
90
Flow rate L/min

GD-41・43・41G・43G

Features

1. Space saving and resource saving are achieved (used materials are shown on the body and lower cap, thus separate collection of parts for resource recycling is easy).
2. Stainless steel (SCS14A and SUS316) is used for wetted parts, improving corrosion resistance.
3. PTFE covers diaphragm contact surface to fluid, making the diaphragm less liable to deteriorate and highly durable.
4. Special fluorine-contained rubber parts are resistant to corrosion.
5. Pressure balance structure can keep the reduced pressure at a constant level without being affected by inlet pressure.
6. Closed structure keeps fluid from flowing to outside even if the diaphragm is damaged or broken.
7. Safe fluorine grease is applied to O-ring.
8. Can be applied to piping washing, system washing, sterilization washing and steam for sterilization.

GD-41

Specifications

Model		GD-41	GD-43-10	GD-43-20	GD-41G	GD-43G-10	GD-43G-20
Application		Cold and hot water			Air, Carbon dioxide gas *1, Nitrogen gas		
		Steam for washing or sterilization					
Inlet pressure		0.07-2.0 MPa (0.2 MPa or less for steam for washing or sterilization) *2					
Reduced pressure		(A) Yellow spring: 0.02-0.1 MPa〔Standard setting: 0.05 MPa〕 (B) Red spring: 0.1-0.25 MPa〔Standard setting: 0.1 MPa〕 (C) Black spring: 0.25-0.5 MPa〔Standard setting: 0.3 MPa〕					
Minimum differential pressure		0.05 MPa					
Maximum pressure reduction ratio		Cold and hot water: 10:1 Air, Carbon dioxide gas, Nitrogen gas: 20:1					
Fluid temperature		5-90˚C (The maximum temperature of steam for washing or sterilization is 130˚C. Allow an interval of at least four hours between steam flows.)					
Material	Body	Cast Stainless steel (SCS14A)					
	Valve disc	Special synthetic rubber (special FKM)					
	Diaphragm	Heat-resistant synthetic rubber and PTFE (PTFE applied to wetted face)					
Connection		JIS Rc screwed	JIS 10K FF flanged	JIS 20K RF flanged	JIS Rc screwed	JIS 10K FF flanged	JIS 20K RF flanged

*1 Please contact us when using for carbon dioxide gas.
*2 The inlet pressure of the GD-43-10 is 0.07 to 1.0 MPa.
・If using for washing steam or sterilization steam, be sure that maximum temperature is 130˚C and avoid continuous use for more than 30 minutes.

Dimensions (mm) and Weights (kg)

●GD-41・41G

Nominal size	d	Weight
15A	Rc 1/2	1.2
20A	Rc 3/4	1.1
25A	Rc 1	1.0

●GD-43・43G

Nominal size	Weight
15A	2.8 (2.6)
20A	3.0 (2.9)
25A	4.0 (3.7)

・The values in parentheses are the weights of the GD-43-10.

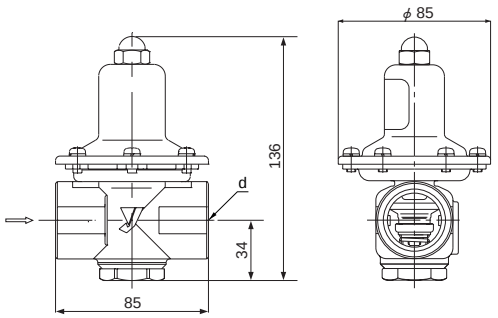

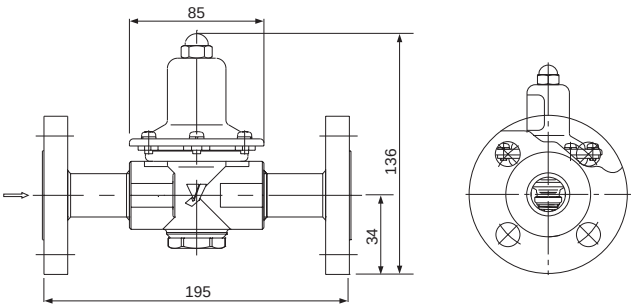

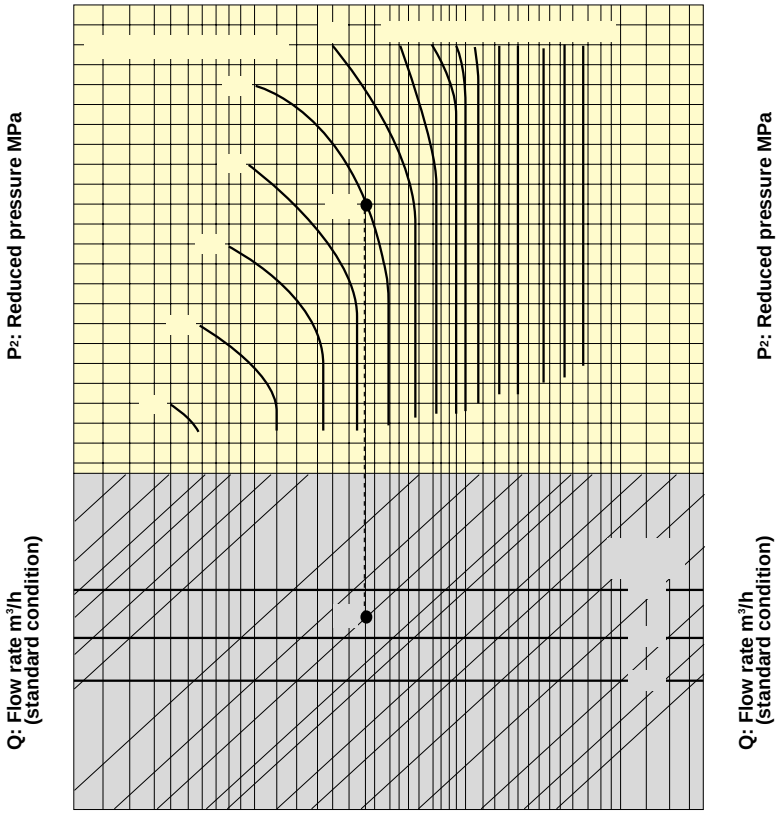
P2: Reduced pressure MPa
Q: Flow rate m³/h (standard condition)
P2: Reduced pressure MPa
Q: Flow rate m³/h (standard condition)

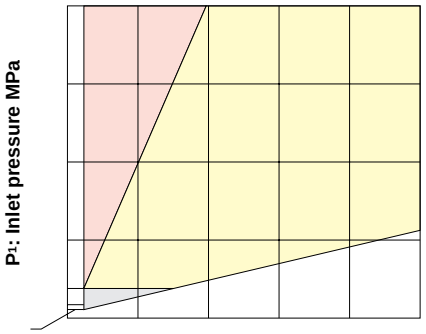
P1: Inlet pressure MPa
P2: Reduced pressure

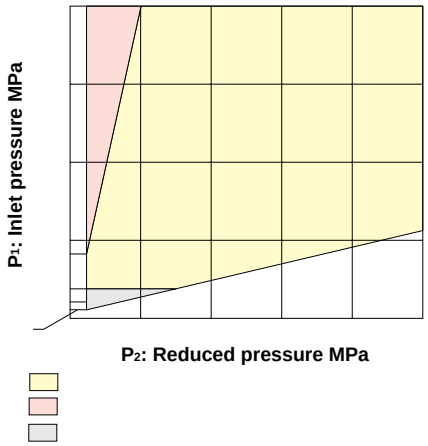
P1: Inlet pressure MPa
P2: Reduced pressure MPa

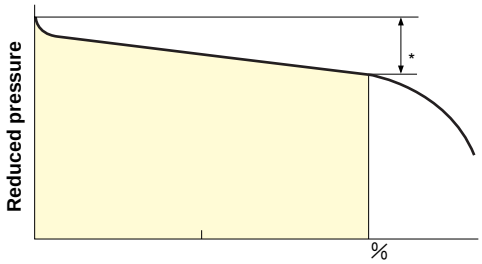
Reduced pressure
*
%
Flow rate

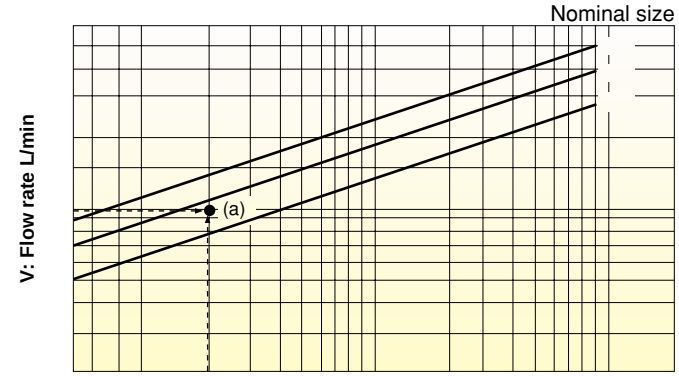
Nominal size
V: Flow rate L/min
(a)
ΔP: Differential pressure MPa

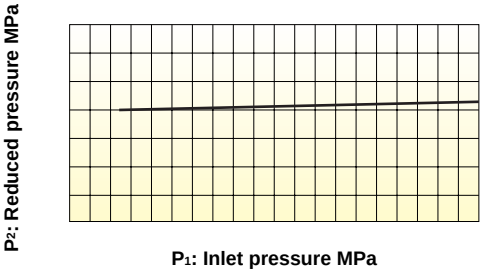
P2: Reduced pressure MPa
P1: Inlet pressure MPa

GD-6

Features

1. High accurate controllability of reduced pressure even at small flow rate.
2. Simple in structure, less prone to fail and easy to maintain.
3. Compact and lightweight.
4. Easy to install due to screwed connections.

Specifications

Model		GD-6
Application		Cold and hot water, Oil, Air, Other non-dangerous fluids
Inlet pressure		0.1-1.0 MPa
Reduced pressure		(A) 0.02-0.1 MPa (Nameplate color: yellow) (B) 0.1-0.4 MPa (Nameplate color: blue)
Minimum differential pressure		0.05 MPa
Maximum pressure reduction ratio		10:1
Application temperature		5-80˚C
Valve seat leakage		None
Fluid viscosity		300 cSt or less
Material	Body	Ductile cast iron *1
	Valve disc, valve seat	Brass and bronze (FKM disc incorporated) *2
	Diaphragm	Stainless steel
Connection		JIS Rc screwed

*1 Available with stainless steel wetted parts and all stainless steel made on request.
*2 Available with stainless steel made valve disc and valve seat on request. Also available with PTFE disc on request.
・Available with anticorrosive (fluororesin-coated) type on request.

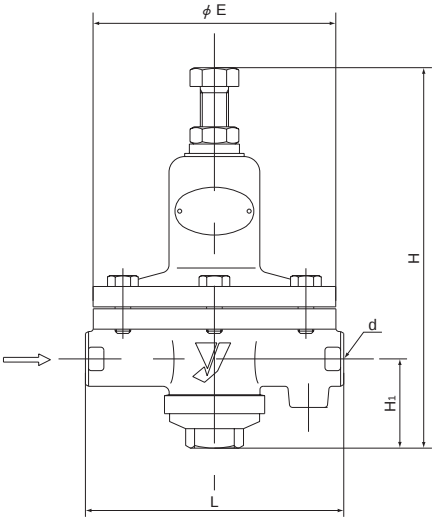

Dimensions (mm) and Weights (kg)

Nominal size	d	L	H	H_1	E	Weight
10A	Rc 3/8	165	243	57	155	5.5
15A	Rc 1/2	165	243	57	155	5.5
20A	Rc 3/4	185	267	76	175	8.2
25A	Rc 1	185	267	76	175	8.2

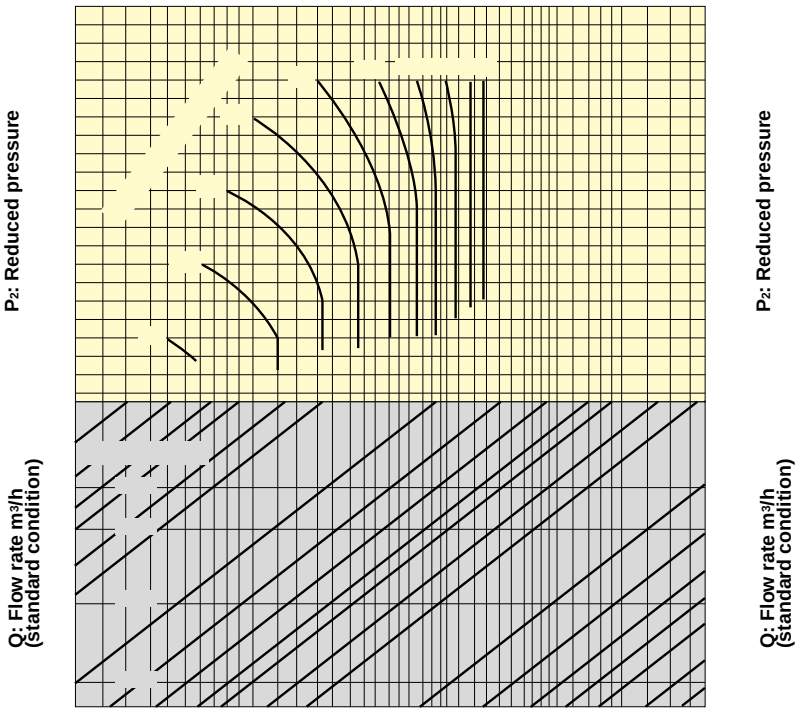
P2: Reduced pressure
Q: Flow rate m3/h
(Standard condition)

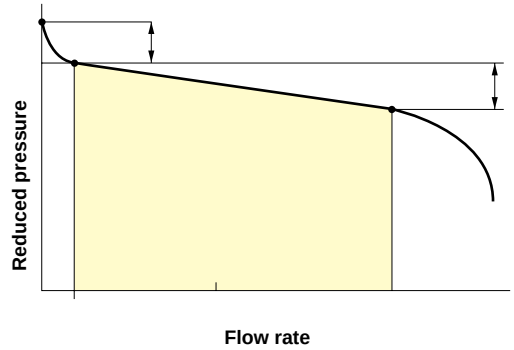
Reduced pressure
Flow rate

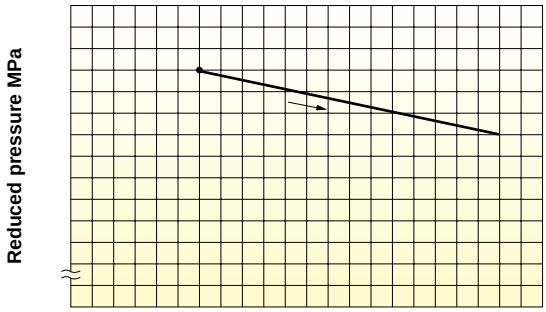
P2: Reduced pressure
Q: Flow rate m3/h
(Standard condition)

Reduced pressure MPa
Inlet pressure MPa

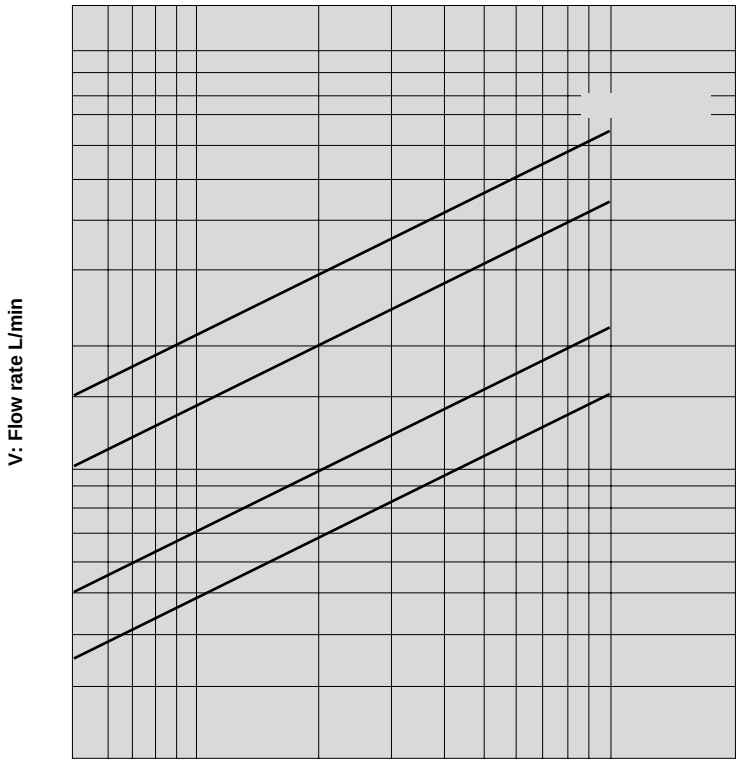
V: Flow rate L/min
ΔP: Differential pressure MPa

GD-7

Features

1. Simple in structure, less prone to fail and easy to maintain.
2. Insusceptible to effect of inlet pressure fluctuation due to dual valve.
3. Outstanding performance as a pressure reducer for lubricant grease and heavy oil.

Specifications

Model		GD-7	
Application		Cold and hot water, Oil, Other non-dangerous fluids	
Nominal size		20A-50A	65A-150A
Inlet pressure		0.1-1.0 MPa	
Reduced pressure		(A) 0.05-0.25 MPa (B) 0.25-0.45 MPa (C) 0.45-0.7 MPa	(A) 0.05-0.2 MPa (B) 0.2-0.5 MPa (C) 0.5-0.7 MPa
		70% or less of inlet pressure (gauge pressure)	
Minimum differential pressure		0.05 MPa	
Maximum differential pressure		0.7 MPa	
Maximum pressure reduction ratio		10:1	
Application temperature		5-80˚C *1	
Fluid viscosity		700 cSt or less	
Material	Body	Cast iron	
	Valve, valve seat	Phosphor bronze *2	
	Spindle	Stainless steel	
	Piston	Bronze	
Connection		JIS 10K FF flanged	

*1 Available with withstanding up to 120˚C.
*2 Available with stainless steel made valve and valve seat.
・ Available with the GD-7H, made of cast steel, with inlet pressure of 2.0 MPa or less and reduced pressure of 0.7 to 1.6 MPa.

● Valve seat leakage (L/min)

Nominal size	20	25	32	40	50	65	80	100	125	150
Leakage	0.16	0.2	0.25	0.32	0.4	0.52	0.64	0.8	1.0	1.2

Dimensions (mm) and Weights (kg)

Nominal size	L	H	H_1	Weight
20A	170	535	95	20
25A	170	535	95	22
32A	180	545	100	23
40A	180	545	100	23
50A	180	565	110	26
65A	215	680	125	41
80A	260	700	135	51
100A	300	750	160	66
125A	360	810	190	90
150A	382	875	220	129

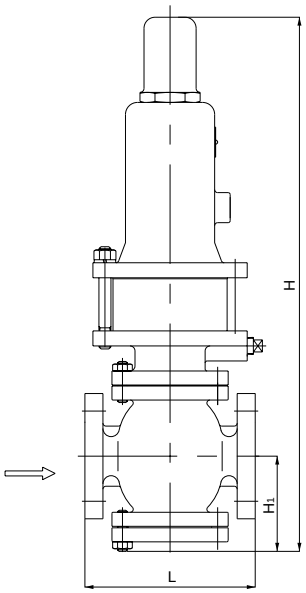

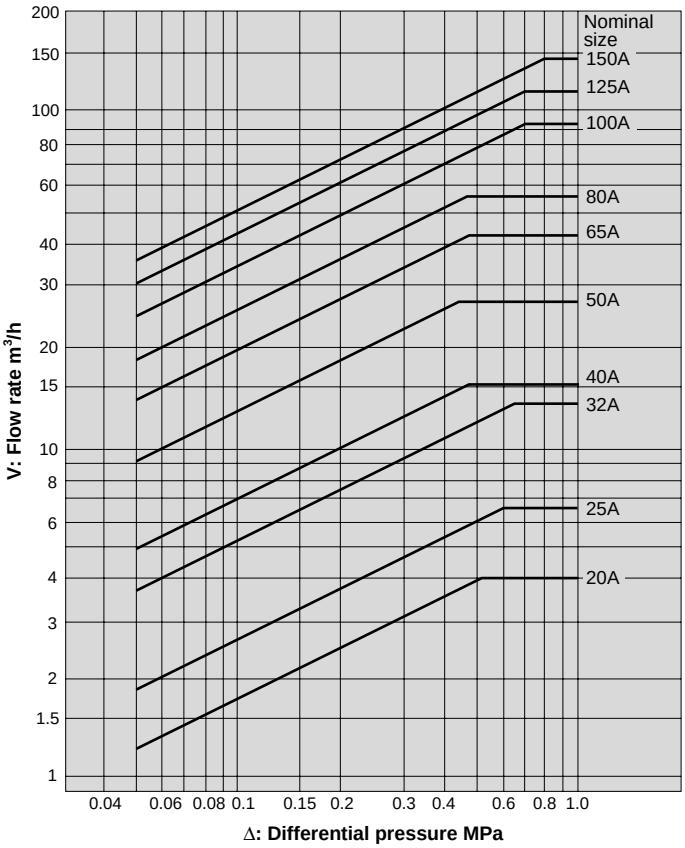

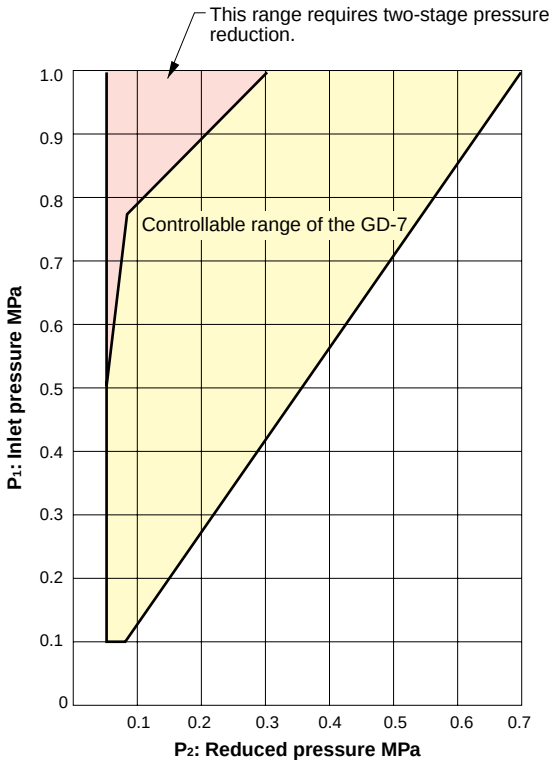

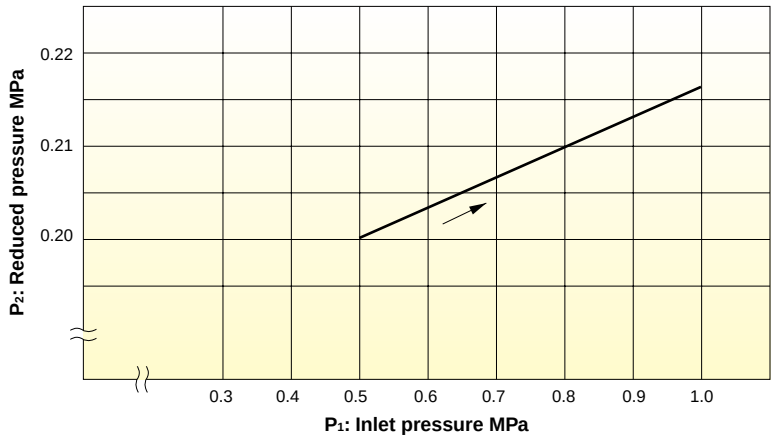

Nominal size	Shut-off pressure rise
20A-50A	Within 10% of set pressure
65A-100A	Within 15% of set pressure
125A-150A	Within 20% of set pressure

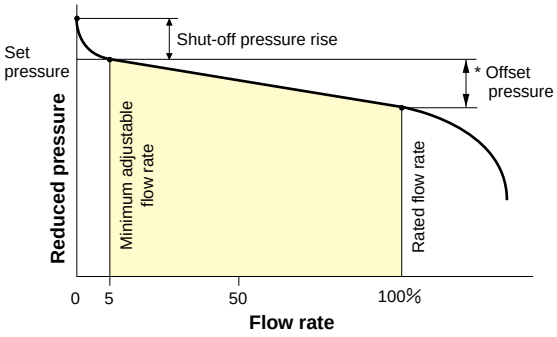

Nominal size	Offset pressure MPa	
	GD-7	GD-7H
20A-50A	Within 0.08	Within 0.23
65A-150A	Within 0.11	Within 0.18

GD-7B

Features

1. Simple in structure, less prone to fail and easy to maintain.
2. Outstanding performance as a pressure reducer for lubricant grease and heavy oil.
3. Pressure balance structure provides stable reduced pressure to inlet pressure and increased maximum pressure ratio.

Specifications

Model		GD-7B	
Application		Cold and hot water, Oil, Other non-dangerous fluids	
Nominal size		20A-50A	65A-150A
Inlet pressure		0.1-1.0 MPa	
Reduced pressure		(A) 0.05-0.25 MPa (B) 0.25-0.45 MPa (C) 0.45-0.7 MPa	(A) 0.05-0.2 MPa (B) 0.2-0.5 MPa (C) 0.5-0.7 MPa
		85% or less of inlet pressure (gauge pressure)	
Minimum differential pressure		0.05 MPa	
Maximum pressure reduction ratio		20A-50A: 20:1 65A-150A: 15:1	
Application temperature		5-80˚C *	
Valve seat leakage		None	
Fluid viscosity		700 cSt or less	
Material	Body	Cast iron	
	Valve	NBR	
	Valve seat	Stainless steel	
	Spindle	Stainless steel	
	Piston	Bronze	
Connection		JIS 10K FF flanged	

* Available with withstanding up to 120˚C.
・ Available with the GD-7BH, made of cast steel, with inlet pressure of 2.0 MPa or less and reduced pressure of 0.7 to 1.6 MPa.

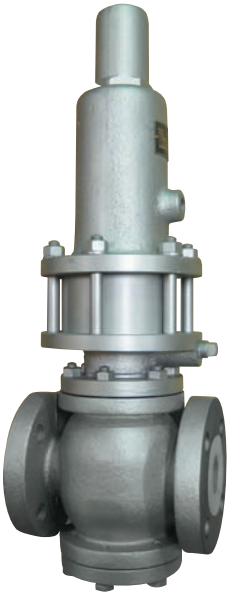

Dimensions (mm) and Weights (kg)

Nominal size	L	H	H_1	Weight
20A	170	535	95	20
25A	170	535	95	22
32A	180	545	100	23
40A	180	545	100	23
50A	180	565	110	26
65A	215	680	125	41
80A	260	705	140	51
100A	300	755	165	66
125A	360	815	195	90
150A	382	885	225	129

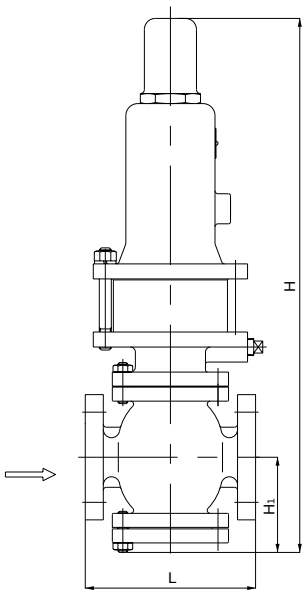

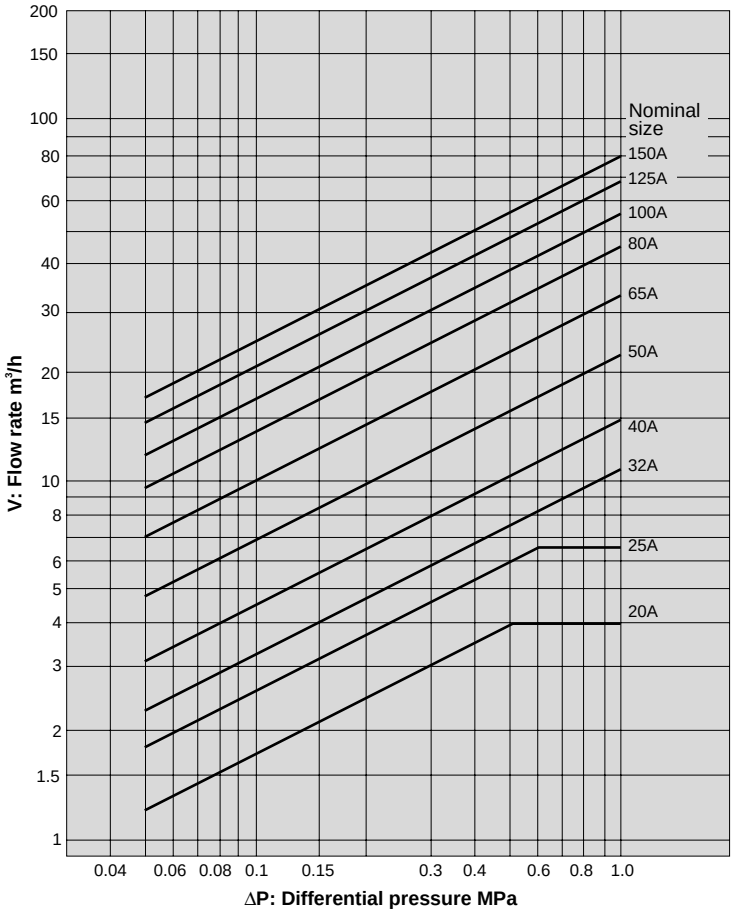

●

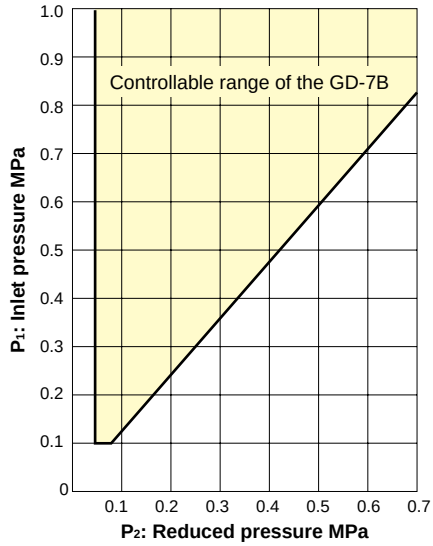

●

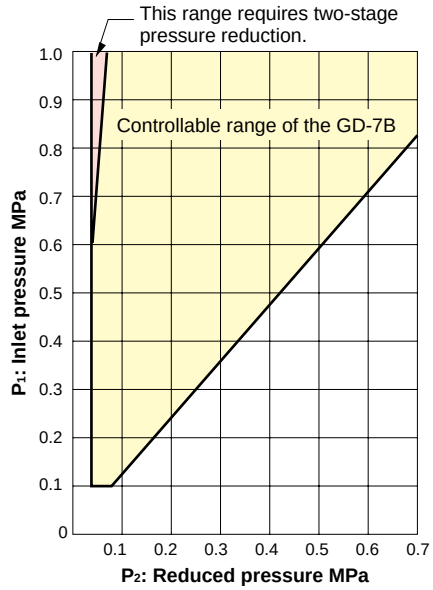

Nominal size	Shut-off pressure rise	
	GD-7B	GD-7BH
20A-50A	Within 10% of set pressure	Within 15% of set pressure
65A-150A	Within 15% of set pressure	Within 15% of set pressure

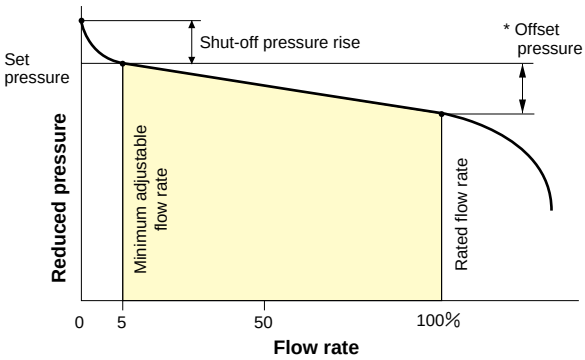

Nominal size	Offset pressure MPa	
	GD-7B	GD-7BH
20A-50A	Within 0.08	Within 0.23
65A-150A	Within 0.11	Within 0.18

GP-1000T

Features

1. Far superior to conventional pressure reducing valve in workability and durability.
2. Free of valve seat leakage. Improved workability as a result of refinement of sliding parts.
3. Simple and robust internal structure.

GP-1000T

GP-1010T

GP-1200T

Description of GP-1000T Series model code

GP-1000T □

- Material, S: trim parts made of stainless steel, SS: wetted parts made of stainless steel, AS: all stainless steel
- 0: standard, 1: equipped with a handle, 2: for low pressure
- 0: flanged, 1: screwed
- 0: standard, 2: air loading type

Specifications

Model		GP-1000T	GP-1010T	GP-1200T	GP-1210T
Application		Air, Other non-dangerous fluids			
Inlet pressure		0.1-1.0 MPa			
Reduced pressure		0.05-0.9 MPa			
		90% or less of inlet pressure (gauge pressure)			
Minimum differential pressure		0.05 MPa			
Maximum pressure reduction ratio		20:1			
Application temperature		5-80˚C			
Valve seat leakage		None			
Material	Body	Ductile cast iron			
	Valve	Brass (NBR contained)			
	Valve seat	Stainless steel			
	Piston, cylinder	Brass or bronze			
	Diaphragm	Stainless steel			
Connection		JIS 10K FF flanged	JIS Rc screwed	JIS 10K FF flanged	JIS Rc screwed

・Available with stainless steel made trim parts (piston, cylinder and valve) as GP-□□□□TS.

Dimensions (mm) and Weights (kg)

●GP-1000T・1200T

Nominal size	L	H1	H	Weight
15A	150	64	285 (220)	8.0
20A	155	64	285 (220)	8.5
25A	160	67	300 (235)	10.0
32A	190	82	323 (258)	14.0
40A	190	82	323 (258)	14.5
50A	220	93	347 (282)	20.0
65A	245	100	357 (292)	30.0
80A	290	122	404 (339)	35.0
100A	330	144	450 (385)	52.5

・The above values in parentheses are the dimensions of the GP-1200T.

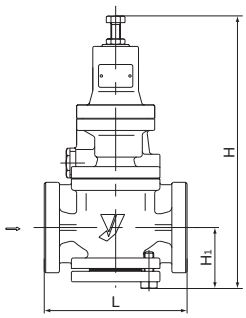

GP-1000T

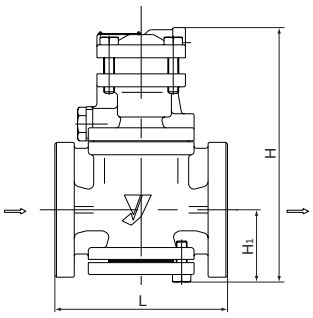

GP-1200T

●GP-1010T・1210T

Nominal size	d	L	H1	H	Weight
15A	Rc 1/2	150	64	285 (220)	7.0
20A	Rc 3/4	155	64	285 (220)	7.0
25A	Rc 1	160	67	300 (235)	8.5
32A	Rc 1-1/4	190	82	323 (258)	12.0
40A	Rc 1-1/2	190	82	323 (258)	12.5
50A	Rc 2	220	93	347 (282)	18.0

・The above values in parentheses are the dimensions of the GP-1210T.

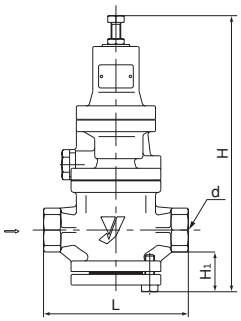

GP-1010T

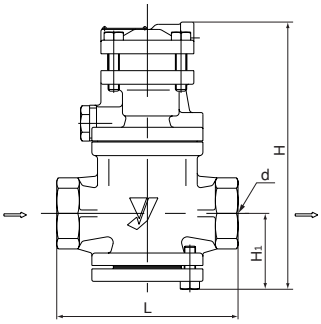

GP-1210T

GP-1000TSS・1000TAS

	-	
	-	

・

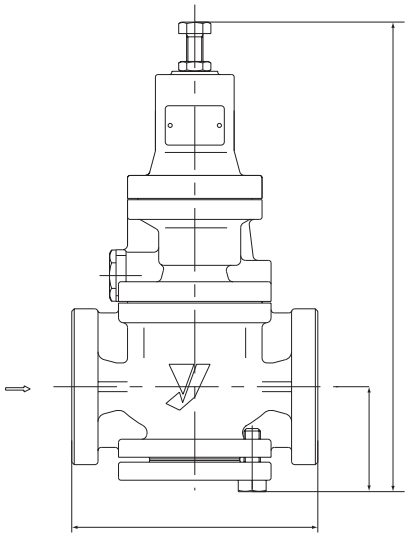

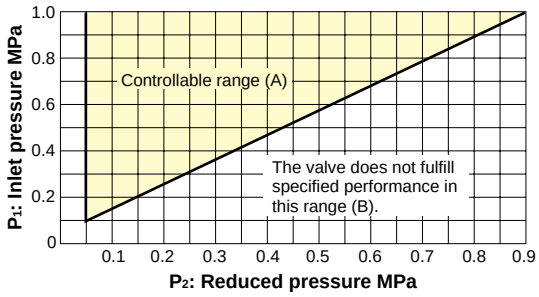

●

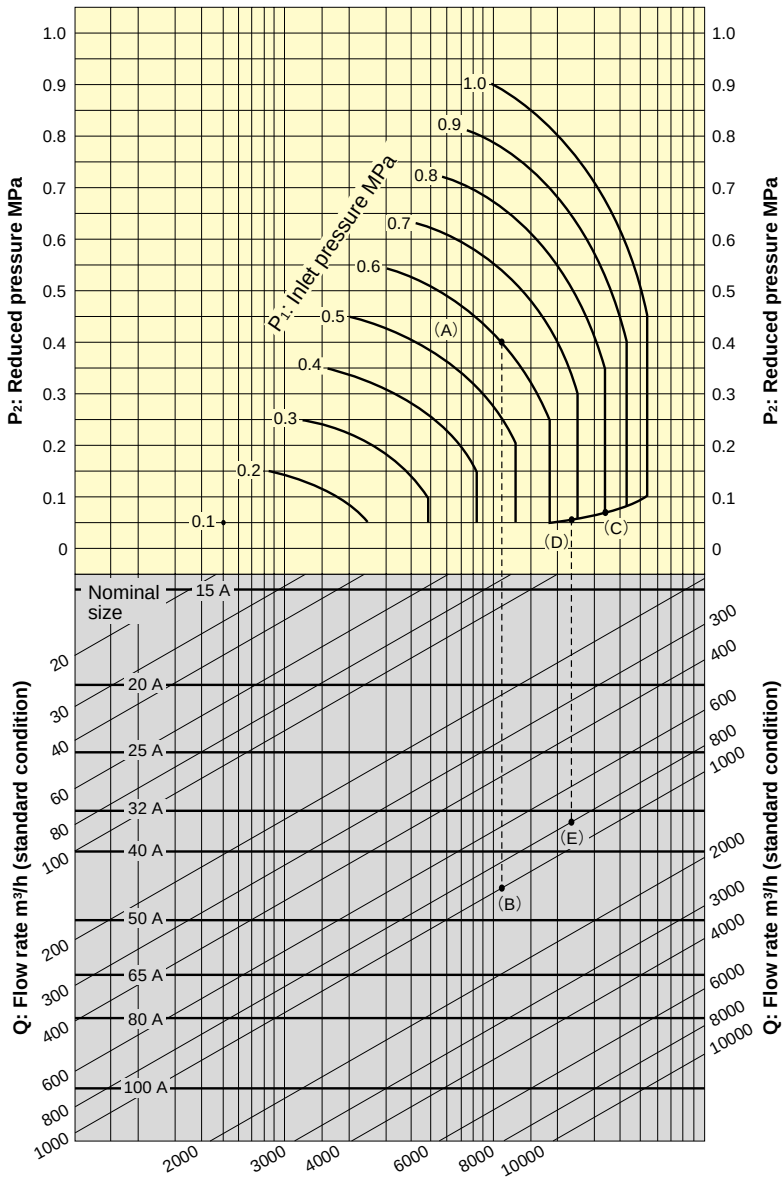
P₂: Reduced pressure MPa
P₁: Inlet pressure MPa
1.0
0.9
0.8
0.7
0.6
0.5
0.4
0.3
0.2
0.1
0
(A)
(B)
(C)
(D)
(E)
Nominal size
15 A
20 A
25 A
32 A
40 A
50 A
65 A
80 A
100 A
Q: Flow rate m³/h (standard condition)
20
30
40
60
80
100
200
300
400
600
800
1000
2000
3000
4000
6000
8000
10000

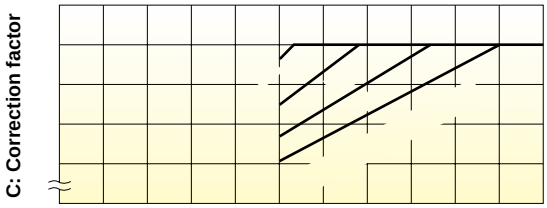
C: Correction factor
P₂: Reduced pressure MPa

●

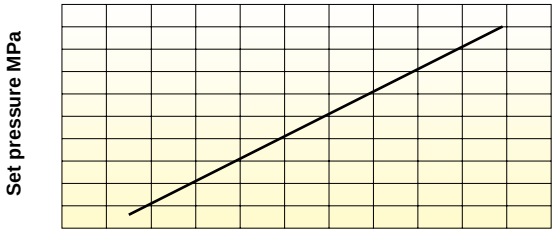
Set pressure MPa
Loading air pressure MPa

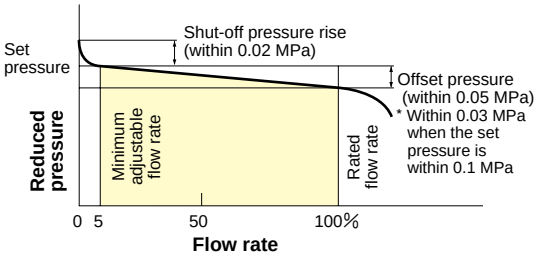
Set pressure
Shut-off pressure rise (within 0.02 MPa)
Offset pressure (within 0.05 MPa)
* Within 0.03 MPa when the set pressure is within 0.1 MPa
Reduced pressure
Minimum adjustable flow rate
Rated flow rate
0
5
50
100%
Flow rate

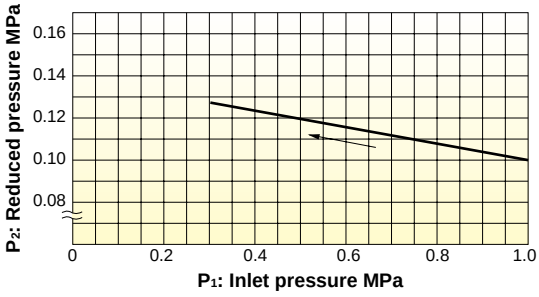
P₂: Reduced pressure MPa
0.16
0.14
0.12
0.10
0.08
0
0.2
0.4
0.6
0.8
1.0
P₁: Inlet pressure MPa

GD-26G・27G

	-	
	-	

・
・

●

●

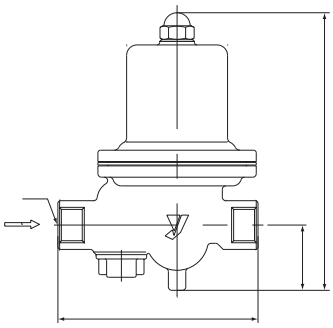

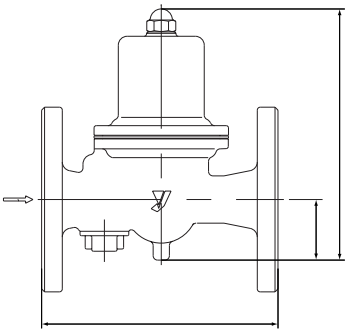

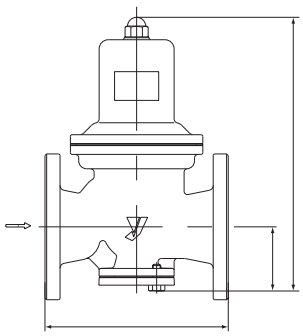

GD-26GS・27GS

Features

1. Corrosion-resistant materials are used for wetted parts.
2. Reduced noise.
3. Pressure balance structure can keep the reduced pressure at a constant level without being affected by inlet pressure.
4. Maintenance and inspection can be conducted easily by disassembling simply from the upper side.
5. Compact and lightweight, easy to handle on piping.

GD-26GS

Specifications

Model		GD-26GS	GD-27GS
Application		Air, Other non-dangerous fluids *	
Inlet pressure		1.0 MPa or less	
Reduced pressure		(A) 0.05-0.35 MPa (B) 0.3-0.7 MPa	
Application temperature		5-90˚C	
Minimum differential pressure		0.05 MPa	
Maximum pressure reduction ratio		10:1	
Material	Body	Cast stainless steel	
	Valve seat	Cast stainless steel	
	Valve disc	EPDM	
	Diaphragm	EPDM	
Connection		JIS Rc screwed	JIS 10K FF flanged

* Please contact us when using for gas containing oil.
・A strainer (40 mesh) is incorporated in 15A to 50A.
・Pressure gauge connection port is JIS Rc 1/8.
・Available with FKM.

GD-27GS

Dimensions (mm) and Weights (kg)

●GD-26GS

Nominal size	d	L	H	H1	Weight
20A	Rc 3/4	135	170	41	2.2
25A	Rc 1	135	170	41	2.2
32A	Rc 1-1/4	180	224	57	4.7
40A	Rc 1-1/2	180	224	57	4.5
50A	Rc 2	200	239.5	61	6.5

●GD-27GS

Nominal size	L	H	H1	Weight
20A	160	170	41	3.9
25A	160	170	41	4.8
32A	200	224	57	8.0
40A	200	224	57	8.3
50A	220	239.5	61	10.8
65A	220	329	77	20.6
80A	230	345	82	22.0
100A	270	412	94	34.5

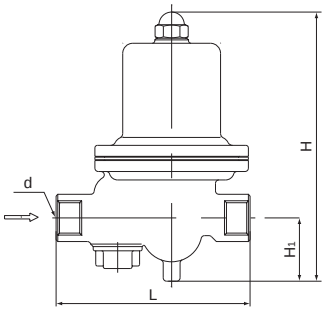

GD-26GS

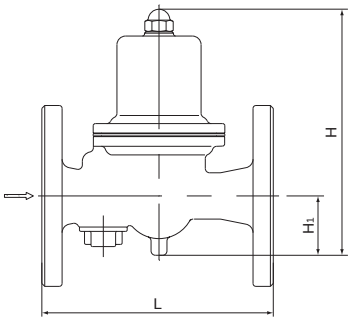

GD-27GS 25A-50A

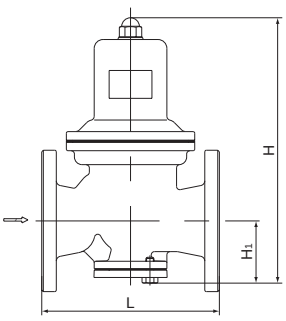

GD-27GS 65A-100A

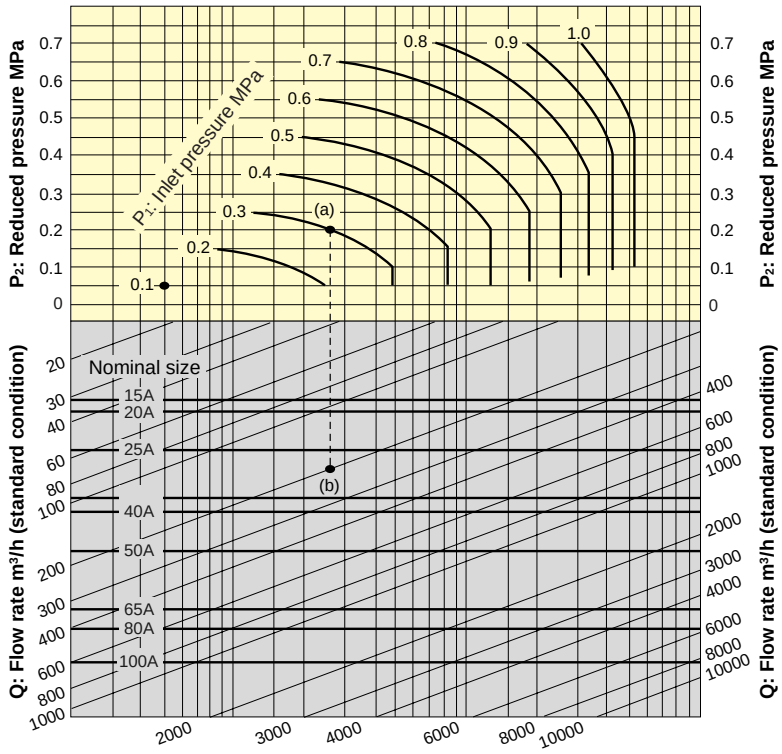
P2: Reduced pressure MPa
0.7
0.6
0.5
0.4
0.3
0.2
0.1
0
P1: Inlet pressure MPa
0.1
0.2
0.3
0.4
0.5
0.6
0.7
0.8
0.9
1.0
(a)
(b)
Nominal size
15A
20A
25A
40A
50A
65A
80A
100A
Q: Flow rate m³/h (standard condition)
20
30
40
60
80
100
200
300
400
600
800
1000
2000
3000
4000
6000
8000
10000

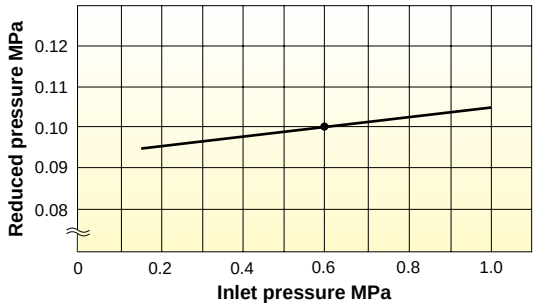
Reduced pressure MPa
0.12
0.11
0.10
0.09
0.08
0
0.2
0.4
0.6
0.8
1.0
Inlet pressure MPa

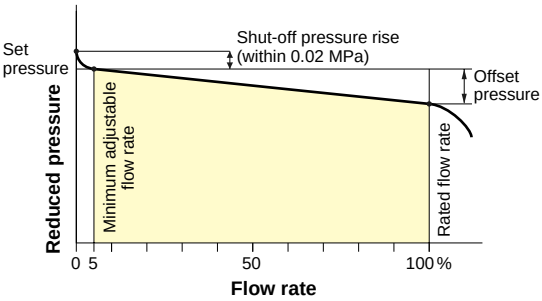
Set pressure
Shut-off pressure rise (within 0.02 MPa)
Offset pressure
Reduced pressure
Minimum adjustable flow rate
Rated flow rate
0
5
50
100%
Flow rate

.

GD-400·400SS

	-	
	-	
	- - - -	
	-	

ϕ

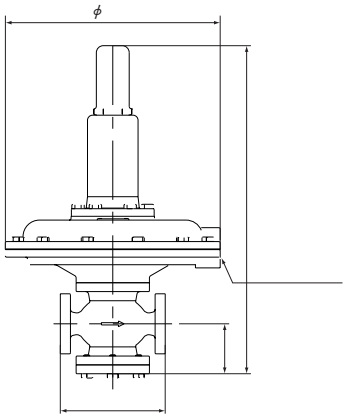

•

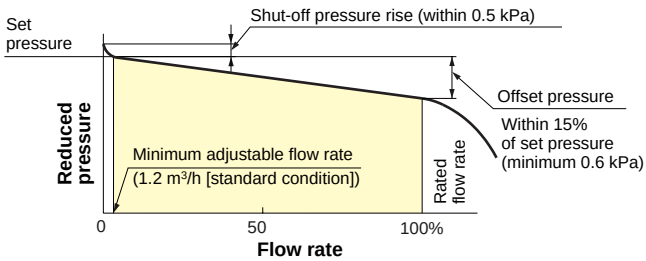

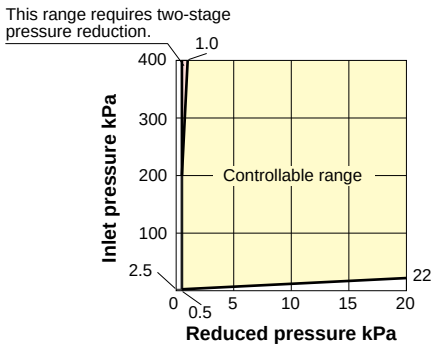

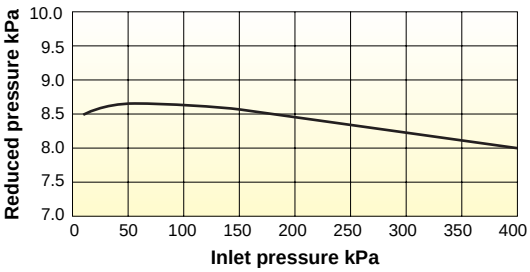

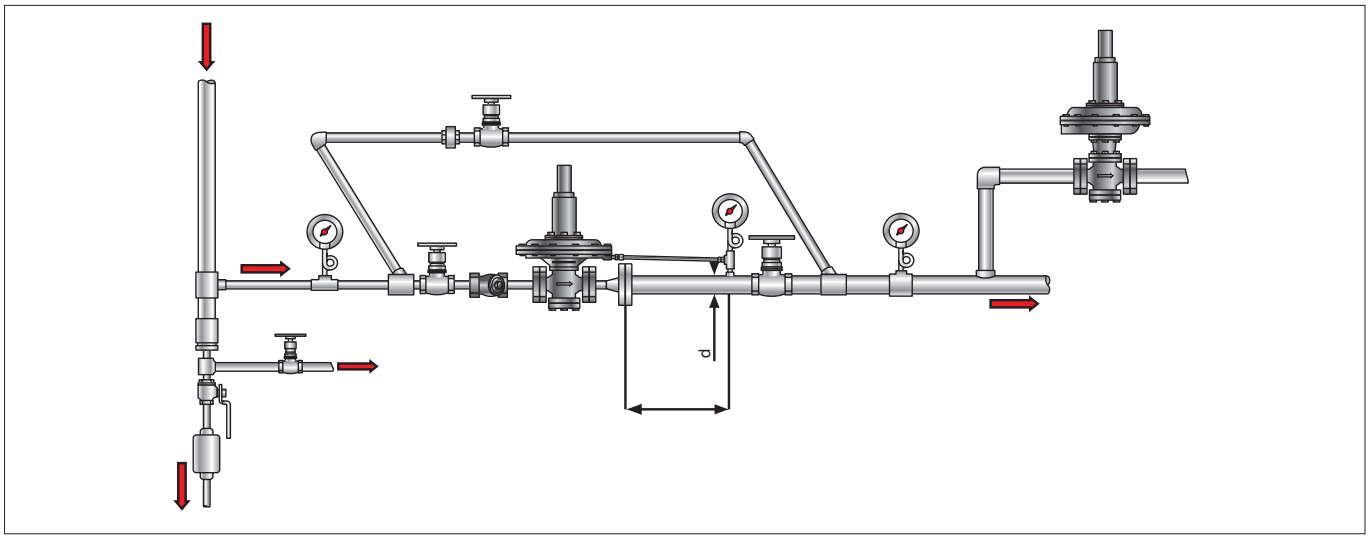
d

●

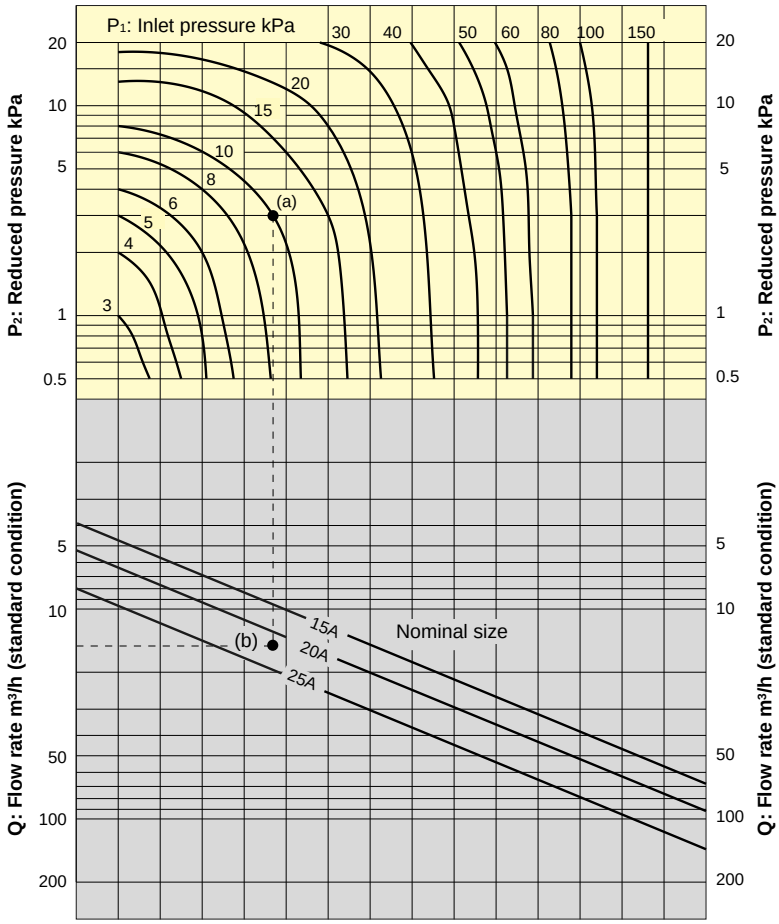
P1: Inlet pressure kPa
30
40
50
60
80
100
150
20
15
10
8
6
5
4
3
(a)
(b)
15A
20A
25A
Nominal size
P2: Reduced pressure kPa
Q: Flow rate m³/h (standard condition)
20
10
5
1
0.5
5
10
50
100
200

Feature		Water pressure reducing valve		Low pressure	Low pressure / balance type
Model		GD-15・15C		GD-4	GD-4B
Picture					
Application		City water		Air, Other non-dangerous fluids	
Inlet pressure		0.1-1.0 MPa		Max. 300 kPa	Max. 800 kPa (20A-50A) Max. 500 kPa (65A-150A)
Reduced pressure		0.05-0.25 MPa (Standard setting: 0.2 MPa)		2-200 kPa ・Contact us for pressure range for each valve.	
Max. temperature		60˚C		80˚C	
Connection		JIS Rc screwed		JIS 10K FF flanged	
Material	Body	Cast bronze (NPb-treated)		Cast iron *	
	Valve	NBR		NBR (20A-50A) Stainless steel (65A-150A)	NBR
	Valve seat	Cast bronze (NPb-treated)		Stainless steel	
	Diaphragm	NBR		NBR	
Size		15A	20A	20A-150A	
Others		・The closing pressure of the check valve for the GD-15C is 0.005 MPa or less. ・The strainer is 40 mesh.		* Available with carbon steel or stainless steel body.	

Feature		316 Stainless steel	General air regulator	Large capacity
Model		GD-8N	GD-9	GP-50
Picture				
Application		Pure water, Cold and hot water, Air, Nitrogen gas, Carbon dioxide gas, Argon gas	Air, Other non-dangerous fluids	Cold and hot water
Inlet pressure		0.1-1.0 MPa	0.1-0.99 MPa	0.14-1.0 MPa
Reduced pressure		0.05-0.7 MPa	0.05-0.85 MPa	0.07-0.2 MPa 0.2-0.4 MPa 0.4-0.7 MPa
Max. temperature		60˚C	60˚C	70˚C
Connection		JIS Rc screwed	JIS Rc screwed	JIS 10K RF flanged
Material	Body	Stainless steel (SUS316)	Aluminum die casting	Cast iron
	Valve	Stainless steel	NBR	NBR, Stainless steel
	Valve seat	Stainless steel	Brass	Stainless steel
	Diaphragm	Fluororesin	NBR	—
	Piston & Cylinder	—	—	Bronze
Size		6A-15A	8A-25A	125A-300A
Others		・Available with reduced pressure of 0.02 to 0.2 MPa (for low pressure). ・Pressure gauge connection port is JIS Rc 1/4 screwed. ・Available with dedicated brackets.	・The product cannot be used for toxic and flammable gases. ・Available with dedicated brackets.	—