Safety Relief Valve

Safety Valve
Relief Valve

Safety Relief Valve Selection

Application				Working Pressure (MPa)	Model	Type					Page
Steam	Air	Water	Oil			Lift Type	Full Bore Type	Lever Type	Closed Type	Open Type	
●	●	●	●	0.05-1.0	AL-140	●			●		111
●	●	●	●		AL-150	●			●		137
●	●				AL-150L	●		●		●	137
●	●	●	●		AL-160	●			●		105
●	●				AL-160L	●		●		●	105
●	●	●	●		AL-31	●			●		124
●	●	●	●	0.05-1.6	AL-17	●			●		116
●	●	●	●	1.0-1.6	AL-150H	●			●		110
●	●				AL-150HL	●		●		●	137
●	●	●	●	1.0-2.0	AL-140H	●			●		111
●	●	●	●		AL-31H	●			●		124
	●	●	●	0.05-1.0	AL-1T	●			●		114
	●	●	●		AL-140T	●			●		113
	●	●	●		AL-150T	●			●		106
	●	●	●		AL-150TML	●		●	●		108
	●	●	●		AL-300T	●			●		118
	●	●	●	0.05-1.3	AL-301T	●			●		118
	●	●	●	0.05-1.5	AL-4T	●			●		120
	●	●	●	0.05-2.0	AL-4ST	●			●		120

Safety Valve Selection

Application				Working Pressure (MPa)	Model	Type					Page
Steam	Air	Water	Oil			Lift Type	Full Bore Type	Lever Type	Closed Type	Open Type	
●				0.05-1.0	AL-1	●				●	114
●					AL-10	●		●		●	115
●					AL-300	●			●		117
●					AL-5·6	●		●		●	122
●	●			0.1-1.0	AF-4		●	●		●	134
●	●				AF-4M		●			●	134
●	●				AF-5S		●	●		●	132
●	●				AF-7		●	●		●	138
●				0.05-1.5	AL-4	●				●	119
●				0.05-1.6	AL-301	●			●		117
●				0.18-1.6	AF-1		●	●		●	138
●					AF-2		●	●		●	136
●	●			0.1-1.6	AF-5		●	●		●	132
●				0.05-2.0	AL-4S	●				●	119
	●			0.1-1.0	AF-7M		●		●		138
	●			0.1-1.96	AF-6H·6HS		●		●		137

Relief Valve Selection

Application				Working Pressure (MPa)	Model	Type					Page
Steam	Air	Water	Oil			Lift Type	Proportional Type	With Handle	Closed Type	Open Type	
		●	●	0.05-1.0	AL-150TR	●		●	●		107
		●	●		AL-250		●		●		127
		●	●		AL-250R		●	●	●		127
		●	●		AL-260		●		●		126
		●	●		AL-260R		●	●	●		126
		●	●		AL-280		●		●		129
		●	●	0.05-1.6	AL-27		●		●		125
		●		0.1-0.7	AL-24		●	●	●		137

Selection of Safety & Relief Valves

What is a Safety and Relief Valve ??

A safety and relief valve ensures the safety of equipment and a system by automatically operating to open its valve when the inlet pressure rises and reaches the set pressure, and to close the valve when the inlet pressure falls to the set pressure.

Applications	• Steam boiler	• Pressure vessel • Heat exchanger • Outlet side of PRV	• Hot-water boiler • Electric water heater • Pressure vessel • Heat exchanger	• Hot-water boiler • Electric water heater • Pressure vessel • Heat exchanger
	Steam	**Steam/Gas**	**Liquid (Water, Oil, etc)**	**Steam/Gas/Liquid**
Types	**Full bore type safety valve**	**Lift type safety valve**	**Relief valve**	**Safety relief valve**
	The flow passage area at valve seat is bigger enough than the nozzle throat area at the inlet side.	The lift of the valve is 1/40 or more and less than 1/4 of the inside diameter of valve seat, and the flow passage area of valve port becomes the smallest in the flow passage area when the valve disc is opened.	The valve is mainly applied to liquid. It automatically operates to open its valve disc when the inlet pressure rises and reaches the set pressure, and to close the valve disc when the inlet pressure falls to the set pressure.	The valve is mainly applied to steam, gas, and liquid. It has both functions of a safety valve and a relief valve.
Major Products	**AF-5・AF-4**	**AL-160・AL-140**	**AL-260・AL-280**	**AL-160・AL-300**
				
				

Note for Selecting a Safety Valve

Laws and Regulations

The structure, the formula for calculating discharge capacity, etc. applied to the safety valves are defined in the laws and regulations. The generally-applied laws and regulations both in Japan and overseas are shown below. Most of Yoshitake's valves comply with JIS B8210, and the rest of our products are generally in accordance with the Pressure Vessel Structure Standard.

Country	Standard No.	Description
Japan	JIS B 8210	Spring loaded safety valves for steam boilers and pressure vessels
China	GB/T 12243-2005	Spring loaded safety valves
USA	ASME/ANSI PTC 25.3	Safety and relief valves - performance test codes
Europe	EN ISO 4126	Safety devices for protection against excessive pressure

The Set Pressure of Safety Valve for Alarm Use at Outlet Side of Pressure Reducing Valve

Set pressure of PRV (MPa)	Set pressure of safety valve (MPa)
0.1 or less	Set pressure of PRV + 0.05 or more
0.11-0.4	Set pressure of PRV + 0.08 or more
0.41-0.6	Set pressure of PRV + 0.1 or more
0.61-0.8	Set pressure of PRV + 0.12 or more
More than 0.8	Set pressure of PRV + 15%

When a safety valve is installed for alarm use at the outlet side of a pressure reducing valve, there is no laws or regulations specified to comply with. In this case, select a safety valve whose discharge capacity is around 10% of the max. flow rate of the pressure reducing valve.

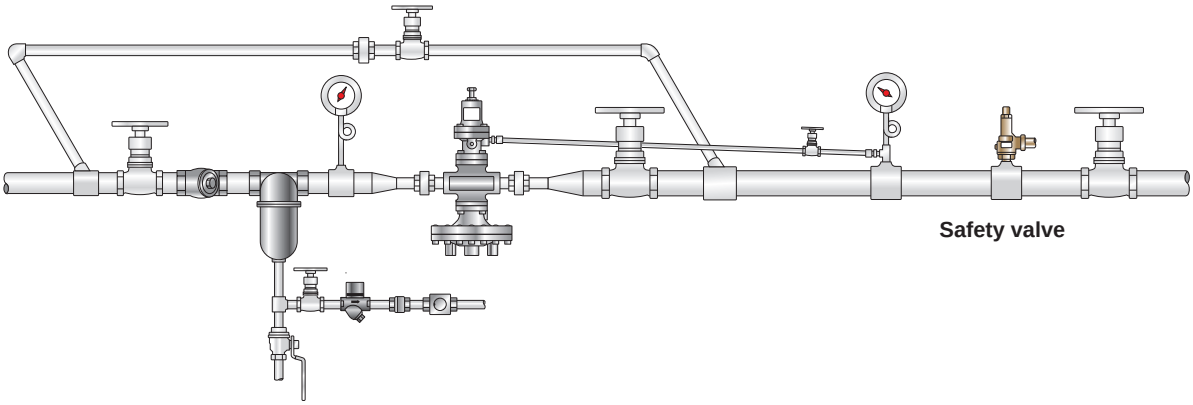

Features of Lift Type Safety Relief Valve ＜AL-160 Series＞

1: Ultimate in rust-resistance

Corrosion-proof material "Stainless steel" used for the trim parts, such as valve and valve seat, offers long durability.

2: No blowdown ring

The design of valve and valve seat fixes the blowdown pressure within a standard requirement to set up the blowdown pressure.

3: Non-leakage

AL-150 with "T" letter adopting a valve with O-ring provides Zero seat leakage.

・Non-leakage at 90% of set pressure.

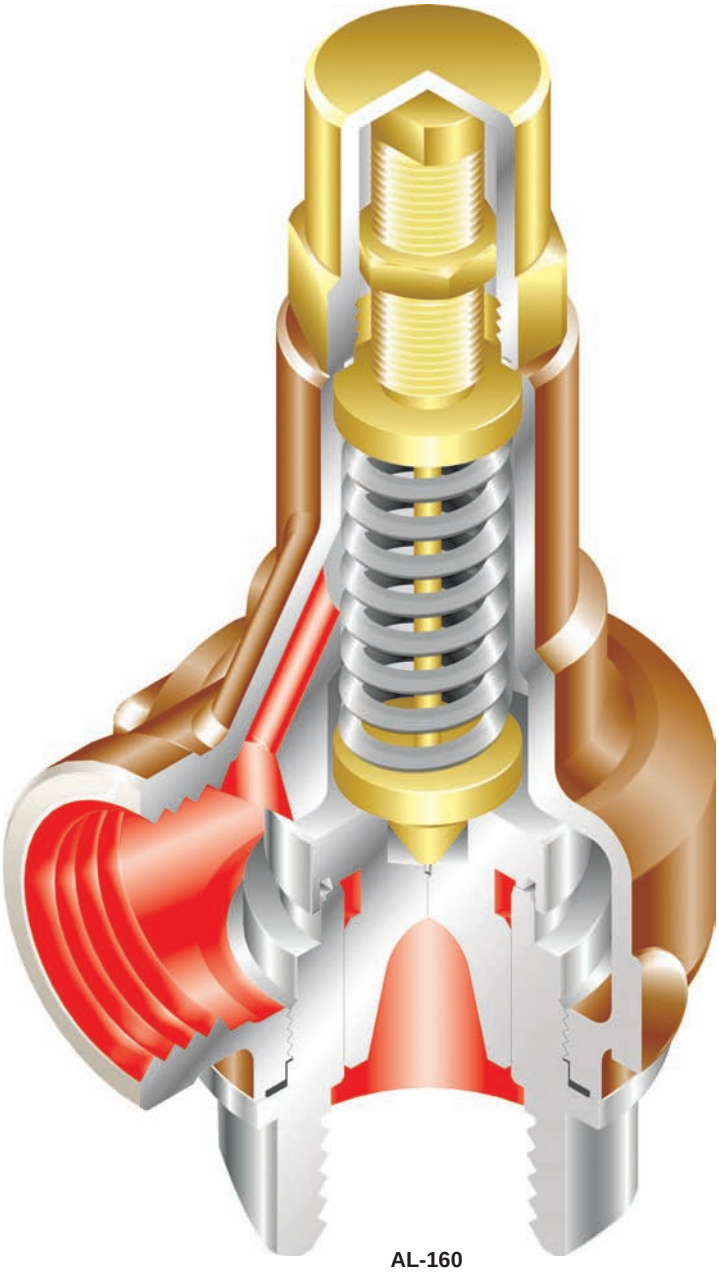

AL-160

4: Variations

AL-160L

AL-150H

AL-150TML

AL-140

AL-140H

Features of Full Bore Type Safety Valve ＜AF-5 Series＞

1: Smaller & Lighter

Size and weight are about half of the conventional full bore type safety valve.

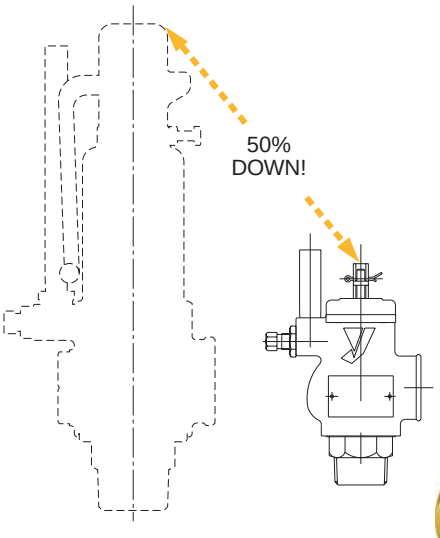

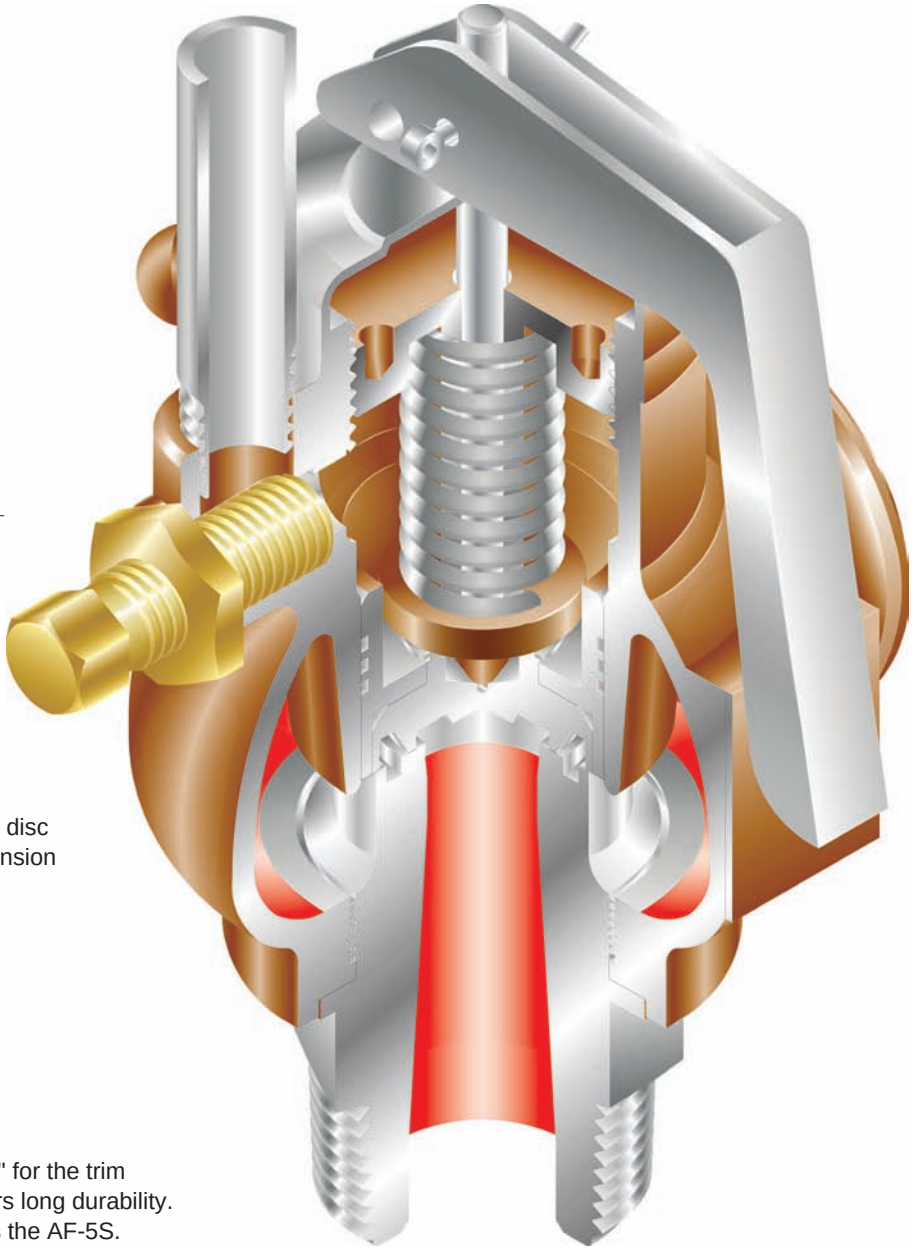

2: Tight-seal valve design

The unique and whippy form of the valve disc enables the disc to respond to heat expansion to prevent seat leakage, and precision machining and heat treatment guarantee continued high performance.

3: Anti-corrosive material

Corrosion-proof material "Stainless steel" for the trim parts, such as valve and valve seat, offers long durability. Available with all stainless steel made as the AF-5S.

4: Lift lever mechanism

Due to lift lever mechanism, discharge inspection can be performed at more than 75% of the opening pressure.

5: Variations

AF-5

AF-5S

Features of Relief Valve ＜AL-280 Series＞

1: Advanced structure

Newly patent pended design (Dash-pot structure) is applied to the valve and valve seat design. It effectively prevents chattering or hunting caused by pulsatile or fluctuating pressure from the pump.

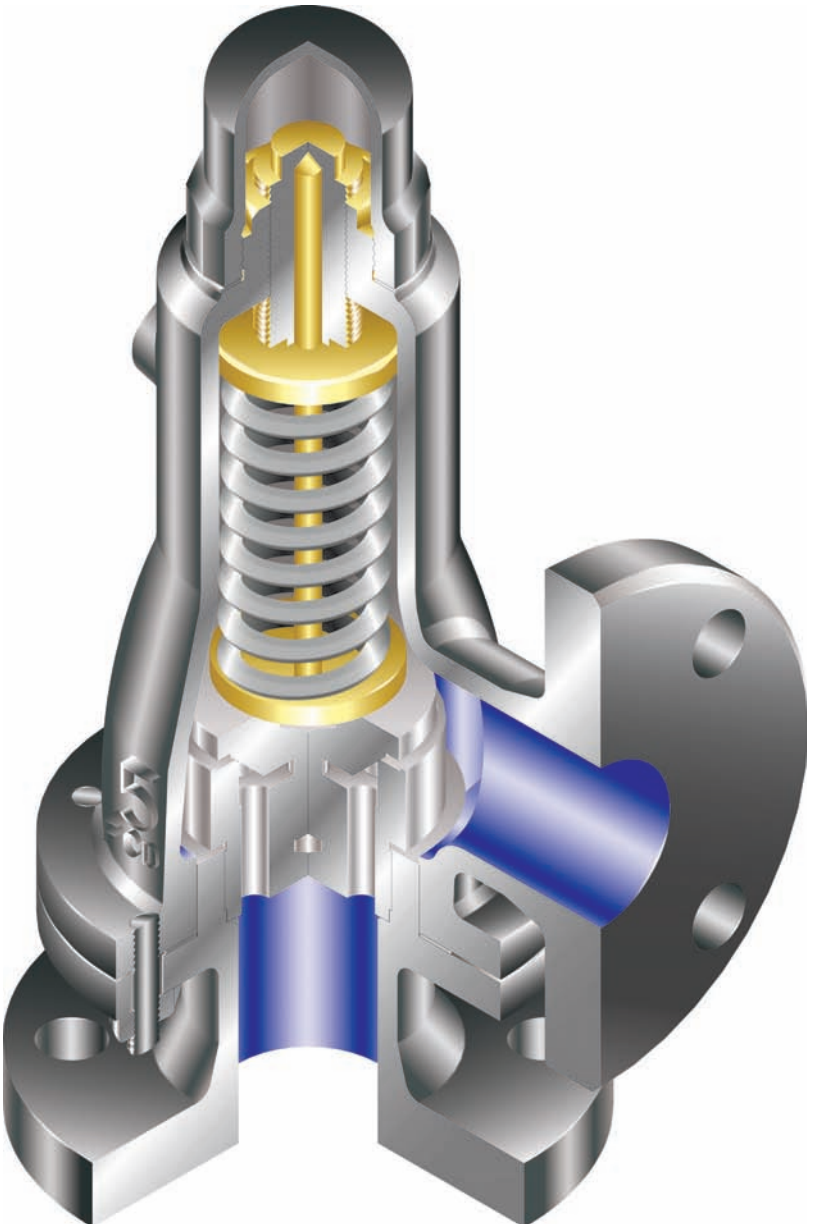

AL-280

2: Piping example

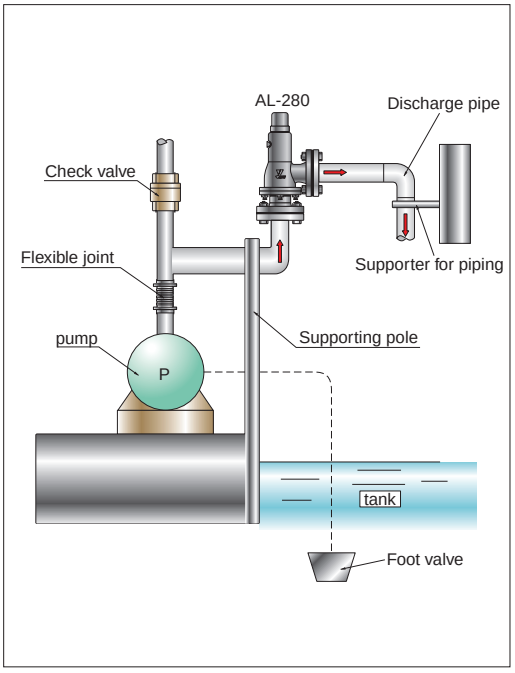

3: Variations

AL-260

AL-250

AL-27

AL-24

Calculation Formula for Selecting Nominal Size

Formula for certified capacity (JIS B 8210:2009)

Boiler Structure Standard

$Qm = 5.25 \times C' \times Kdr \times AP$

Qm: Certified capacity (kg/h)
C': Coefficient depending on steam properties, which is shown in Table-5 on page 103.
Kdr: Certified derated coefficient of discharge (= measured value x 0.9)
[Lift type: 0.883(AL-150H: 0.816) Full bore type: 0.777]
AL-160・150 Series 32A: 0.844
40A: 0.872
50A: 0.874
A: Flow area (mm²)
P: Absolute flow rating pressure (MPa)
For boiler, (set pressure x 1.03 + 0.101) or (set pressure + 0.015 + 0.101), whichever larger.
For pressure vessel, (set pressure x 1.1 + 0.101) or (set pressure + 0.020 + 0.101), whichever larger.
However, if allowable over pressure is specified, it shall be followed.

Pressure Vessel Structure Standard

[Steam]
$Qm = 5.25 \times C' \times Kdr \times AP$

[Gas]
$Qm = C'' \times Kdr \times P_1 \times Kb \times \sqrt{\frac{M}{ZT}}$

Qm: Certified capacity (kg/h)
C": Coefficient depending on adiabatic exponent (k), which is evaluated by the following formula.

$$C'' = 39.48 \left(\sqrt{\frac{2}{k+1}}\right)^{\frac{k+1}{k-1}}$$

When adiabatic exponent (k) is unknown, supposing that k = 1.001, C" = 23.96.
Kdr: Certified derated coefficient of discharge
[Lift type: 0.883(AL-150H: 0.816) Full bore type: 0.777]
AL-160・150 Series 32A: 0.844
40A: 0.872
50A: 0.874
A: Flow area (mm²)
P_1: Absolute flow rating pressure (MPa)
P_1 = (set pressure x 1.1 + 0.101) or (set pressure x 0.020 + 0.101), whichever larger.
However, if allowable over pressure is specified, it shall be followed.
M: Molecular weight of gas (kg/kmol)
Z: Compression coefficient (if unknown, Z = 1.0)
T: Absolute temperature of gas at flow rating pressure (K)
Kb: Corrective coefficient of back pressure

When $\frac{P_2}{P_1} > \left(\frac{2}{k+1}\right)^{\frac{k}{k+1}}$

$$Kb = \frac{55.83}{C''}\sqrt{\frac{k}{(k-1)}\left(\left(\frac{P_2}{P_1}\right)^{\frac{2}{k}} - \left(\frac{P_2}{P_1}\right)^{\frac{k-1}{k}}\right)}$$

When $\frac{P_2}{P_1} \leqq \left(\frac{2}{k+1}\right)^{\frac{k}{k+1}}$

Kb = 1.0

Yoshitake Standard for Liquid (25% Accumulation)

● Except AL-160・150 Series

$$V = \frac{AK}{12.4\sqrt{\frac{G}{P}}}$$

V : Discharge capacity (m³/h)
A : Flow area (mm²)
K : 0.7 (Flow rate coefficient)
G : Specific gravity
P : Opening pressure (MPa)

● AL-160・150・150T・140T・150TML・150TR

$$V = 0.161AK\sqrt{PG}$$

V : Discharge capacity (m³/h)
A : Flow area (mm²)
K : Flow rate coefficient: 0.5 (when set pressure is 0.1 MPa or less)
0.6 (when set pressure is more than 0.1 MPa)
P : Pressure to determine discharge capacity (MPa): Opening pressure x 1.25
G : Specific gravity

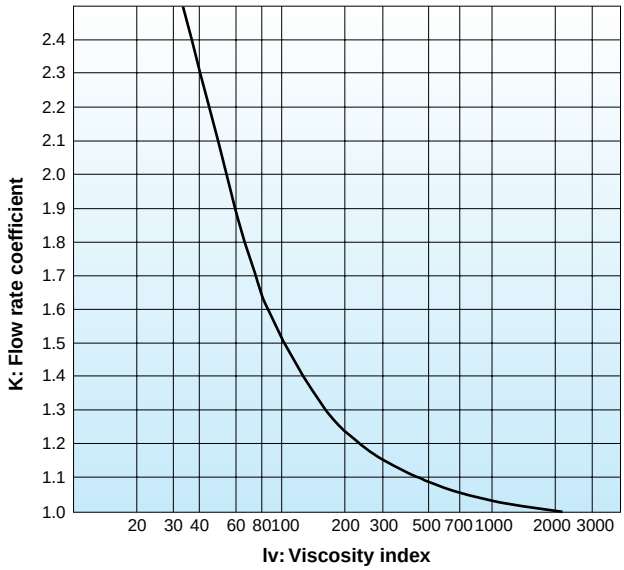

Viscosity correction curve

Formula for viscosity correction

First, calculate the discharge capacity (V) leaving the viscosity out of consideration.

$$V = \frac{AK}{12.4\sqrt{\frac{G}{P}}}$$

Next, find viscosity index (Iv).

$$Iv = \frac{72780}{Mcst}\left(\frac{\Delta P}{G}\right)^{\frac{1}{4}} V^{\frac{1}{2}}$$

Find K from calculated Iv on the viscosity correction curve.
The calculated discharge capacity (V) divided by K is the value of the corrected flow rate.

Corrected discharge capacity: V' = V/K (m³/h)

V : Discharge capacity (m³/h)
A : Flow area (mm²)
K : Correction coefficient
G : Specific gravity
P : Opening pressure (MPa)
ΔP : $P_1 - P_2$ (MPa)
Cv : Cv value
Iv : Viscosity index
Mcst : Viscosity [cSt]

Definitions

Start to Discharge Pressure : The inlet pressure at which the safety valve actually starts to discharge and outflow of an extremely small quantity of fluid (steam or gas) is detected at the outlet. The extremely small quantity means a minimum amount of visually or audibly detectable steam, or a minimum amount of gas that can be detected audibly or by using soap solution. The outflow does not mean the leakage from the valve seat.

Opening Pressure : The inlet pressure at which the valve disc "Pops."
The opening pressure is also called "popping pressure."
"Popping" is an action of discharging fluid inside the valve due to the sudden rise of the valve disc.

Set Pressure : The opening pressure or start to discharge pressure determined in designing.

Closing Pressure : The inlet pressure fallen down to the level at which the valve disc and the valve seat are in contact and the lift becomes zero. It is also called "reseating pressure."

Blowdown : The difference between opening pressure or start to discharge pressure and closing pressure.

Over Pressure : The increasing pressure that exceeds the set pressure of the safety valve.

Allowable Over Pressure : The over pressure within the allowable range.

Coefficient of Discharge : The coefficient used to calculate the actual discharge capacity from the theoretical discharge capacity. The coefficient is the ratio between the two capacities, and it counts the frictional resistance.

Certified Derated Coefficient of Discharge : The coefficient of discharge to be applied to calculate the certified capacity.

Flow Rating Pressure : The inlet pressure taken as the basis for determining the certified capacity of the safety valve, which is the sum of the set pressure and the allowable over pressure.

Back Pressure : The pressures existing at the outlet of the safety valve. There are two types as the following:
(a) Accumulated back pressure: The pressure existing at the outlet of a safety valve caused by the resistance of the outlet side when the safety valve has been relieved.
(b) Existing back pressure: The pressure which has already been superimposed at the outlet before the safety valve is relieved.

Theoretical Discharge Capacity : The discharge capacity calculated supposing that the fluid is free from friction and its flow rate coefficient is 1, and that the valve discharges the ideal gas of fixed specific heat with isentropic change.

Certified Capacity : The certified discharge capacity for each safety valve.
That is obtained by the formula of Theoretical Discharge Capacity x Certified Derated Coefficient of Discharge x 0.9. (Theoretical Discharge Capacity is specified in JIS B 8225.)

Lift : The amount of travel, in axial direction of the valve or valve rod, away from the closed position to the opened position during discharge of the safety valve.

Rated Lift : The lift determined in designing, at which the certified capacity is exercised.

Seat Diameter : The inside diameter of setting surface of a valve with valve seat.

Throat Diameter : The diameter of the smallest portion of a nozzle from intake opening of fluid to valve seat face.

Throat Area : The flow passage area calculated using the throat diameter.

Seat Flow Area : The cylindrical or conical flow passage area between the valve and the valve seat secured when the valve lifts up. It is also called "curtain area."

Flow Area : The area of the part which determines the flow capacity that passes through a safety valve and is used to calculate the certified capacity.

Guidelines for Installing Safety Valve

Pipe Mount for Installing Safety Valve

1. Pipe mount of a safety valve should have sufficient strength and rigidity against compression, shear stress, and bending stress caused by reaction because the pipe mount is subject to the reaction which is caused along the center line of outlet of a blowout pipe connected to the safety valve in the direction contrary to the discharging direction.
2. The pressure loss in the pipe mount for a safety valve makes the discharge quantity decreased and the function of the safety valve unstable. Therefore a safety valve should be installed vertically as near as possible to a vessel, a header, etc. (See Fig.1.)

Exhaust Pipe of Safety Valve

An exhaust pipe and an drip pan elbow should be installed so that a safety valve may not be subject to stress caused by the thermal expansion of a boiler or equipment and by the expansion or contraction of a discharge pipe due to the thermal action of blowout of the safety valve. (See Fig.1.)
The inner diameter of a exhaust pipe should be as larger as possible than that of an outlet pipe of a safety valve, and the exhaust pipe should be lead to outside or a safe place.

Installation of Safety Valve

1. Do not remove the blind plate before completing the preparation for installation so that any foreign matter does not come into a safety valve.
2. Be sure to remove foreign matter completely from equipment, pipes, and vessels by washing their insides before installation.
3. In installing a safety valve, do not apply a pipe wrench, etc. to the places other than the specified ones.
4. Do not apply any force from the outside.
5. Equip a valve casing and a exhaust pipe with a drain pipe for each to prevent raindrops and dirt, etc. from accumulating.

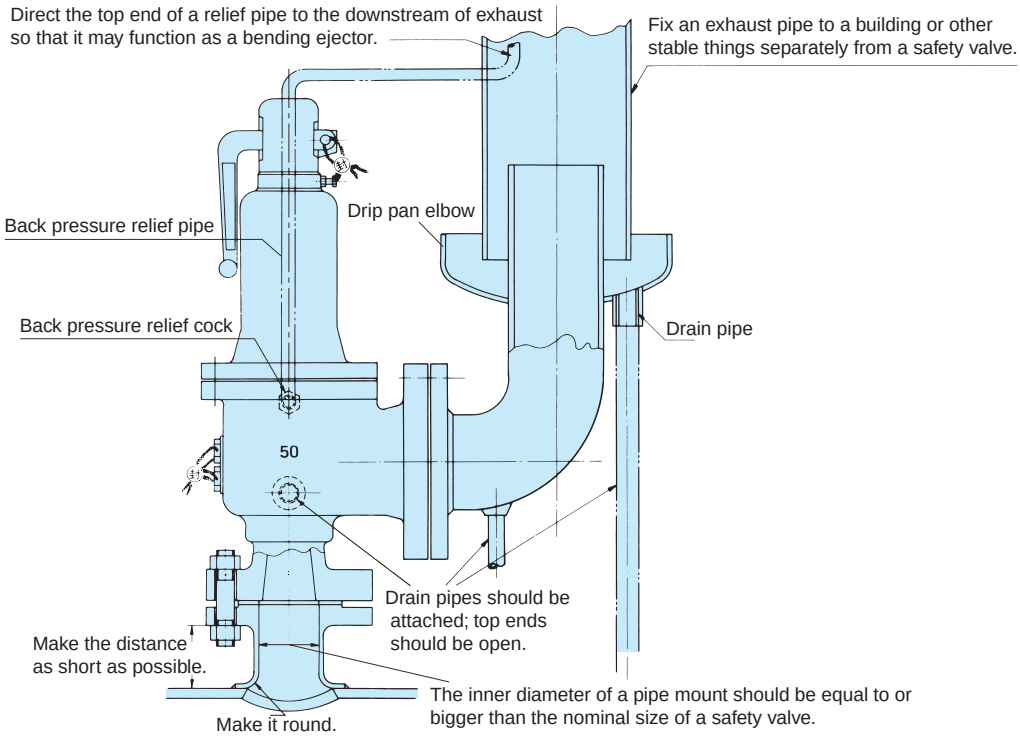

Fig. 1 Piping Instruction

Abstract of JIS B 8210 "Steam boilers and pressure vessels-Spring loaded safety valves"

⚠ Warning Do not apply the product to devices which do not allow any valve seat leakage.
* The product has allowable valve seat leakage and does not close completely (valve seat leakage cannot be zero).

⚠ Caution For installation and operation, see the manual "instruction manual" attached with the product.

Capability

1. Tolerance of start to discharge pressure

●Safety valve for steam

There is no regulation for start to discharge pressure of safety valve for steam.

●Safety valve for gas

Tolerance of start to discharge pressure of safety valve for gas is ±5% (however, ±0.025 MPa in minimum). If exceeding set pressure is not acceptable, add absolute value of positive side to one of negative. For gas, set pressure is generally start to discharge pressure.

2. Tolerance of opening (popping) pressure

●Safety valve for steam

Opening pressure tolerance of safety valve for steam is shown in Table-1 below. If exceeding set pressure is not acceptable, add absolute value of positive side to one of negative.

Table-1 Opening pressure tolerance of safety valve for steam (MPa)

Set pressure	Tolerance
Less than 0.5	± 0.015
0.5-2.29	± (3% of set pressure)
2.3-6.99	± 0.07 {± 0.7}
7.0 or more	± (1% of set pressure)

Note 1) As to safety valve for steam, set pressure is generally start to discharge pressure.
2) Opening pressure tolerance of safety valve for steam except for boilers is ±3% (however, ±0.015 MPa in minimum).

●Safety valve for gas

Opening pressure tolerance of safety valve for gas is less than 1.1 times of start to discharge pressure. However, to set by set pressure, opening pressure tolerance is ±3% (±0.015 MPa in minimum) of set pressure.

3. Blowdown

●Safety valve for steam

Opening of safety valve for steam is shown in Table-2 below. If discharge pressure of safety valve for steam, which is used for through flow boiler, reheater and piping, exceeds 0.3 MPa, blowdown can be less than 10% of set pressure.

Table-2 Blowdown of safety valve for steam (MPa)

Set pressure	Blowdown
0.4 or less	0.03
More than 0.4	7% (4%) or less of set pressure

Note 1) As to safety valve for gas, blowdown is generally difference between start to discharge pressure and closing pressure.
2) If there is an agreement between the parties, the value in ( ) can be applied.

●Safety valve for gas

Blowdown of safety valve for gas is shown in Table-3 below.

Table-3 Blowdown of safety valve for gas (MPa)

Set pressure	Blowdown	
	Metal seat type	Soft seat type
0.2 or less	0.03 or less	0.05 or less
More than 0.2	15% or less of set pressure	25% or less of set pressure

Note 1) As to safety valve for gas, blowdown is generally difference between start to discharge pressure and closing pressure. However, to set by start to discharge pressure, it is difference between opening pressure and closing pressure.
2) As to the definitions of metal seat type and soft seat type, see JIS B 0100.

●Safety valve for liquid (Yoshitake standard)

Blowdown of safety valve for liquid is shown in Table-4 below.

Table-4 Blowdown of safety valve for liquid (MPa)

Set pressure	Blowdown	
	Metal seat type	Soft seat type
0.2 or less	0.03 or less	0.05 or less
More than 0.2	15% or less of set pressure	25% or less of set pressure

Note 1) As to the definitions of metal seat type and soft seat type, see JIS B 0100.

Calculation methods of certified capacity for safety valve

⚠ Warning Do not apply the product to devices which do not allow any valve seat leakage.
* The product has allowable valve seat leakage and does not close completely (valve seat leakage cannot be zero).

⚠ Caution For installation and operation, see the manual "instruction manual" attached with the product.

1. Certified capacity for safety valve for steam

(1) To calculate by certified coefficient of discharge, use the following formula:

Qm = 5.25 x C'' x Kdr x AP

Qm: Certified capacity (kg/h)
A: Flow area (mm^2)
P: For boiler, (set pressure x 1.03 + 0.101) or (set pressure + 0.015 + 0.101), whichever larger.
For pressure vessel, (set pressure x 1.1 + 0.101) or (set pressure + 0.020 + 0.101), whichever larger.
However, if allowable over pressure is specified, it shall be followed.
Kdr: Certified derated coefficient of discharge (= measured value x 0.9)
C': Coefficient depending on the properties of steam, which is shown in Table-5 on page 103.

(2) If not measuring certified coefficient of discharge, calculate certified capacity using the value of Kdr' in Fig. 2 below instead of Kdr in (1). For full bore type safety valve, use Kdr' = 0.777.

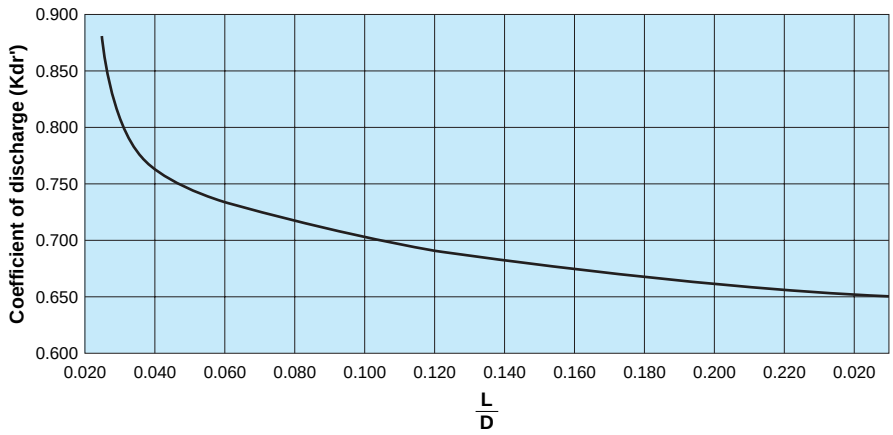

L: Lift (mm)
D: Seat diameter (mm)

Fig. 2 Coefficient of discharge Kdr'

Table-5 Coefficient depending on properties of steam (C')

Absolute pressure MPa	Temperature ˚C																										
	Saturation pressure	200	220	240	260	280	300	320	340	360	380	400	420	440	460	480	500	520	540	560	580	600	620	640	660	680	700
0.5	1.004	0.994	0.971	0.950	0.931	0.912	0.895	0.879	0.863	0.848	0.834	0.821	0.808	0.796	0.784	0.773	0.763	0.752	0.742	0.733	0.724	0.715	0.706	0.698	0.690	0.682	0.675
1	0.986	0.980	0.982	0.960	0.938	0.919	0.900	0.883	0.867	0.852	0.837	0.824	0.810	0.798	0.786	0.775	0.764	0.753	0.743	0.734	0.725	0.716	0.707	0.699	0.691	0.683	0.675
1.5	0.976	0.975	0.969	0.969	0.946	0.825	0.906	0.888	0.871	0.855	0.843	0.826	0.813	0.800	0.788	0.777	0.765	0.755	0.745	0.735	0.726	0.717	0.708	0.699	0.691	0.684	0.676
2	0.971		0.966	0.963	0.955	0.932	0.912	0.893	0.875	0.859	0.844	0.829	0.815	0.802	0.790	0.778	0.767	0.756	0.746	0.736	0.727	0.717	0.709	0.700	0.692	0.684	0.676
2.5	0.968			0.960	0.965	0.940	0.918	0.898	0.880	0.863	0.847	0.832	0.818	0.805	0.792	0.780	0.769	0.758	0.747	0.737	0.728	0.718	0.709	0.701	0.693	0.685	0.677
3	0.966			0.961	0.956	0.948	0.925	0.904	0.884	0.867	0.850	0.835	0.821	0.807	0.794	0.782	0.770	0.759	0.748	0.738	0.729	0.719	0.710	0.702	0.693	0.685	0.678
4	0.964				0.957	0.953	0.939	0.915	0.895	0.875	0.857	0.841	0.826	0.811	0.798	0.785	0.773	0.762	0.751	0.741	0.731	0.721	0.712	0.703	0.695	0.687	0.679
5	0.965					0.955	0.952	0.929	0.905	0.884	0.865	0.847	0.831	0.816	0.802	0.789	0.776	0.765	0.753	0.743	0.733	0.723	0.714	0.705	0.696	0.688	0.680
6	0.968					0.962	0.953	0.943	0.917	0.893	0.873	0.854	0.837	0.821	0.807	0.793	0.780	0.768	0.756	0.745	0.735	0.725	0.715	0.706	0.698	0.689	0.681
7	0.971						0.959	0.954	0.930	0.904	0.881	0.861	0.843	0.826	0.811	0.797	0.783	0.771	0.759	0.748	0.737	0.727	0.717	0.708	0.699	0.690	0.682
8	0.975						0.968	0.956	0.944	0.915	0.890	0.869	0.849	0.832	0.816	0.801	0.787	0.774	0.762	0.750	0.739	0.729	0.719	0.709	0.701	0.691	0.683
9	0.980							0.963	0.960	0.927	0.900	0.877	0.856	0.837	0.820	0.805	0.791	0.777	0.765	0.753	0.741	0.731	0.721	0.711	0.702	0.693	0.685
10	0.987							0.972	0.962	0.941	0.911	0.885	0.863	0.843	0.825	0.809	0.794	0.780	0.767	0.755	0.744	0.733	0.723	0.713	0.703	0.695	0.686
12	1.000								0.977	0.973	0.935	0.904	0.878	0.856	0.836	0.818	0.802	0.787	0.773	0.761	0.748	0.737	0.726	0.716	0.707	0.697	0.688
14	1.019								1.005	0.982	0.964	0.926	0.896	0.870	0.848	0.828	0.811	0.795	0.780	0.766	0.753	0.741	0.730	0.720	0.710	0.700	0.691
16	1.039									1.005	1.001	0.952	0.916	0.886	0.861	0.839	0.820	0.802	0.786	0.772	0.758	0.746	0.734	0.723	0.713	0.703	0.694
18	1.068									1.044	1.007	0.977	0.933	0.903	0.875	0.851	0.829	0.811	0.793	0.778	0.764	0.751	0.738	0.727	0.716	0.706	0.696
20	1.100										1.036	1.011	0.958	0.917	0.890	0.863	0.840	0.819	0.801	0.785	0.769	0.756	0.743	0.731	0.720	0.709	0.699
22	1.136										1.081	1.038	0.989	0.937	0.903	0.877	0.851	0.828	0.809	0.791	0.775	0.761	0.747	0.735	0.723	0.712	0.702
24												1.068	1.024	0.963	0.919	0.888	0.863	0.839	0.817	0.798	0.783	0.767	0.752	0.740	0.727	0.716	0.705
26												1.116	1.065	0.989	0.940	0.902	0.873	0.849	0.827	0.805	0.787	0.772	0.757	0.742	0.731	0.719	0.708
28												1.185	1.105	1.022	0.962	0.917	0.886	0.856	0.834	0.813	0.794	0.777	0.762	0.748	0.734	0.721	0.711
30													1.142	1.059	0.986	0.936	0.898	0.869	0.841	0.821	0.800	0.782	0.764	0.752	0.737	0.725	0.714
32													1.180	1.103	1.015	0.956	0.912	0.880	0.852	0.827	0.807	0.788	0.771	0.754	0.743	0.728	0.715
34														1.154	1.042	0.974	0.928	0.891	0.862	0.837	0.813	0.793	0.776	0.758	0.747	0.730	0.719
36														1.210	1.075	0.998	0.946	0.903	0.872	0.844	0.819	0.800	0.781	0.762	0.749	0.735	0.724
38															1.112	1.023	0.961	0.918	0.881	0.852	0.826	0.805	0.786	0.766	0.751	0.740	0.725
40															1.152	1.047	0.980	0.933	0.892	0.861	0.834	0.810	0.790	0.770	0.755	0.743	0.726
42																1.075	1.001	0.947	0.906	0.871	0.841	0.817	0.795	0.775	0.759	0.746	0.729
44																1.104	1.021	0.961	0.918	0.881	0.849	0.823	0.802	0.781	0.7623	0.750	0.733
46																1.135	1.045	0.978	0.928	0.893	0.857	0.831	0.807	0.787	0.767	0.755	0.741

Note 1) Intermediate value of pressure and temperature in this chart is calculated by proportion method.
2) Absolute pressure shall be absolute value of pressure to determine discharge capacity.

Calculation methods of certified capacity for safety valve

⚠ Warning

Do not apply the product to devices which do not allow any valve seat leakage.
* The product has allowable valve seat leakage and does not close completely (valve seat leakage cannot be zero).

⚠ Caution

For installation and operation, see the manual "instruction manual" attached with the product.

Calculation methods of certified capacity for safety valve

⚠ Warning Do not apply the product to devices which do not allow any valve seat leakage.
* The product has allowable valve seat leakage and does not close completely (valve seat leakage cannot be zero).

⚠ Caution For installation and operation, see the manual "instruction manual" attached with the product.

2. Certified capacity for safety valve for gas

(1) To calculate by certified coefficient of discharge, use the following formula:

$$Qm = C'' \times Kdr \times P_1 \times A \times Kb \times \sqrt{\frac{M}{ZT}}$$

Qm: Certified capacity (kg/h)
C'': Coefficient depending on adiabatic exponent (k), calculated by the following formula:.

$$C'' = 39.48 \left(\sqrt{\frac{2}{k+1}}\right)^{\frac{k+1}{k-1}}$$

If adiabatic exponent (k) is unknown, setting k = 1.001, C'' = 23.96.
P_1: Absolute flow rating pressure (MPa)
P_1 = (set pressure x 1.1 + 0.101) or (set pressure x 0.020 + 0.101), whichever greater.
However, if allowable over pressure is specified, it shall be followed.
Kdr: Certified derated coefficient of discharge (= measured value x 0.9)
A: Flow area (mm^2)
M: Molecular weight of gas (kg/kmol)
Z: Compression coefficient shown in Table 2 (if unknown, Z = 1.0)
T: Absolute temperature of gas under flow rating pressure (K)
Kb: Corrective coefficient of back pressure

In case of $\frac{P_2}{P_1} > \left(\frac{2}{k+1}\right)^{\frac{k}{k+1}}$

$$Kb = \frac{55.83}{C''} \sqrt{\frac{k}{(k-1)} \left[\left(\frac{P_2}{P_1}\right)^{\frac{2}{k}} - \left(\frac{P_2}{P_1}\right)^{\frac{k-1}{k}}\right]}$$

In case of $\frac{P_2}{P_1} \leqq \left(\frac{2}{k+1}\right)^{\frac{k}{k+1}}$

Kb = 1.0

(2) If not measuring certified coefficient of discharge, calculate certified capacity using the value of Kdr' in Fig. 3 below instead of Kdr in (1). For full bore type safety valve, set Kdr = 0.777.

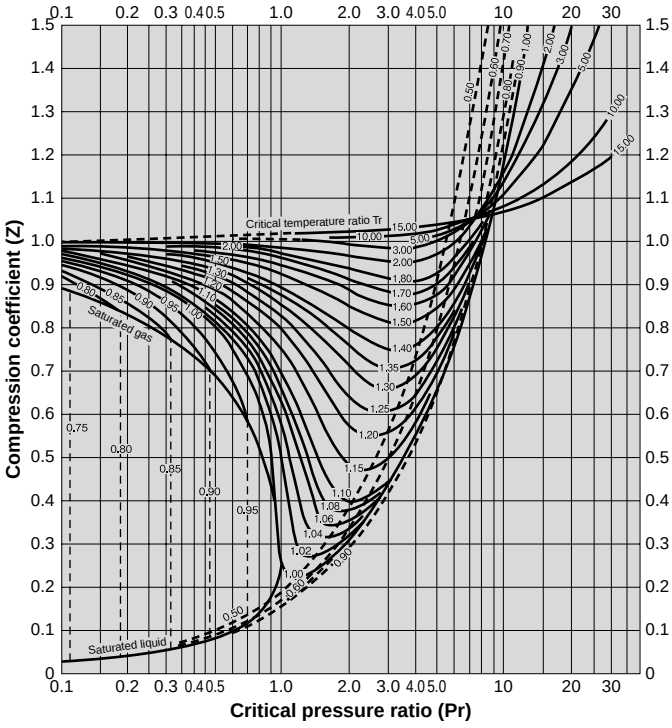

Fig. 3 Compression coefficient

Note) Critical temperature ratio

$$Tr = \frac{\text{Discharge temperature (K)}}{\text{Critical temperature (K)}}$$

Critical pressure ratio

$$Pr = \frac{\text{Opening pressure (absolute value)}}{\text{Critical pressure (absolute value)}}$$

AL-160•160L

Features

1. Versatile type, compatible with fluids such as steam, air, water, and oil.
2. Popping structure ensures reliable discharge.
3. The AL-160L is lift lever type, and a discharge inspection can be manually performed on the valve at more than 75% of opening pressure.
4. The trim parts (valve and valve seat) are made of stainless steel. Used for the trim parts is SCS14A (equivalent to SUS316) with outstanding corrosion resistance.
5. Advanced technology, high-quality materials and a simple structure ensure easy maintenance and inspections and astonishing durability.

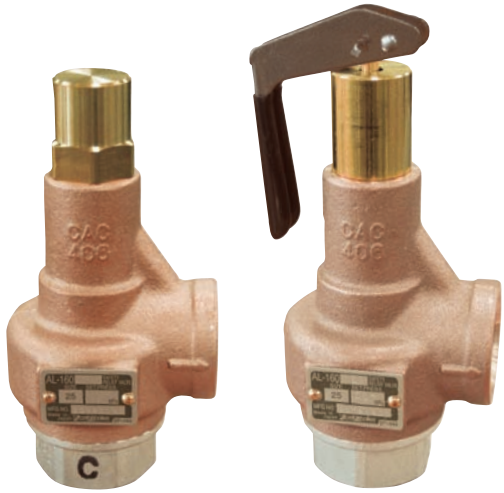

AL-160 AL-160L

Specifications

Model		AL-160	AL-160L
Structure		Closed type	Open type with a lever
Application		Steam, Air, Water, Oil, Non-dangerous fluids	Steam, Air
Working pressure		0.05-1.0 MPa	
Maximum temperature		220℃ *	220℃
Material	Spring case	Cast bronze	
	Valve, valve seat	Cast stainless steel (SCS14A)	
Connection		JIS Rc screwed	

' Qeb j ^uf j r j qb j mbo^qrob fp .2-Á@ t ebk rpfkd clo t ^qbo) lfi) lo lqebo ifnrfap+

Dimensions and Weights

●AL-160

						π ℓ	

●AL-160L

						π ℓ	

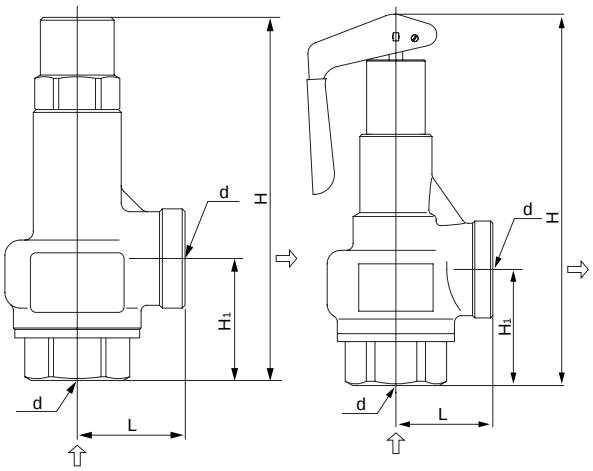

AL-160 AL-160L

AL-150T

Features

1. Safety relief valve with excellent airtightness ensured by the valve seat incorporating soft seat. Most suitable for applications where valve seat leakage is not tolerated.
2. The trim parts (valve and valve seat) and adjusting spring are made of stainless steel. Used for the trim parts is SCS14A (equivalent to SUS316) with outstanding corrosion resistance.
3. Simple structure and easy to handle.
4. Closed structure prevents fluid leakage.

Specifications

Structure		Closed type
Application		Air, Cold and hot water, Oil, Other non-dangerous fluids *
Working pressure		0.05-1.0 MPa
Maximum temperature		120˚C
Material	Spring case	Cast bronze
	Valve, valve seat	Cast stainless steel (SCS14A)
	Adjusting spring	Stainless steel
	O-ring	FKM
Connection		JIS Rc screwed

* Please contact us when using for oil.

Dimensions and Weights

Nominal size	Dimension (mm)					Flow area $\pi D \ell$ (mm²)	Weight (kg)
	d	L	H_1	H	Seat diameter		
15A	Rc 1/2	34	40	128	16	20.1	0.7
20A	Rc 3/4	38	43	128.5	21	34.6	0.8
25A	Rc 1	43	51.5	144.5	26	53.0	1.1
32A	Rc 1-1/4	50	61.5	181.5	33	93.3	1.8
40A	Rc 1-1/2	60	60	205	41	135.2	2.8
50A	Rc 2	75	76	245.5	51	208.2	4.7

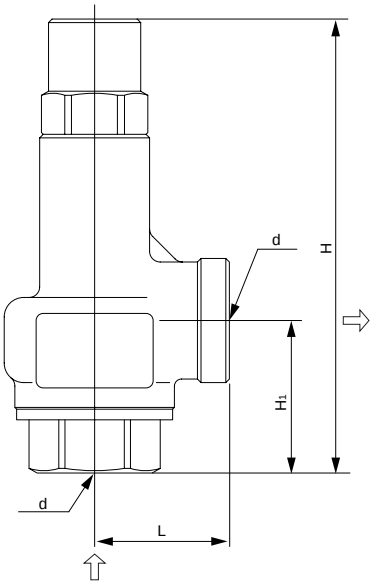

Soft seat is used for the trim parts!

Soft seat (O-ring) is used for the trim parts,
ensuring the reliable airtightness of the valve seat.

AL-150TR

Features

1. Handle type relief valve, pressure can be changed easily.
2. Excellent airtightness ensured by the valve seat incorporating soft seat. Most suitable for applications where valve seat leakage is not tolerated.
3. The trim parts (valve and valve seat) and adjusting spring are made of stainless steel. Used for the trim parts is SCS14A (equivalent to SUS316) with outstanding corrosion resistance.
4. Simple structure and easy to handle.
5. Closed structure prevents fluid leakage.

Specifications

Structure		Closed type with a handle
Application		Cold and hot water, Oil, Other non-dangerous fluids *
Working pressure		0.05-1.0 MPa
Maximum temperature		120˚C
Material	Spring case	Cast bronze
	Valve, valve seat	Stainless steel (SCS14A)
	Adjusting spring	Stainless steel
	O-ring	FKM
Connection		JIS Rc screwed

* Please contact us when using for oil.

Dimensions and Weights

Nominal size	Dimension (mm)					Flow area $\pi D \ell$ (mm²)	Weight (kg)
	d	L	H_1	H	Seat diameter		
15A	Rc 1/2	34	40	184	16	20.1	1.0
20A	Rc 3/4	38	43	186	21	34.6	1.1
25A	Rc 1	43	51.5	203	26	53.0	1.4
32A	Rc 1-1/4	50	61.5	239	33	93.3	2.1
40A	Rc 1-1/2	60	60	276	41	135.2	3.2
50A	Rc 2	75	76	314	51	208.2	5.1

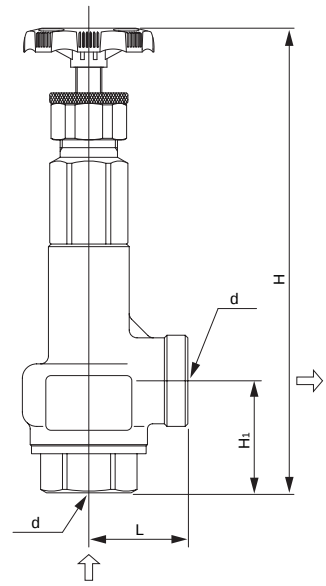

Soft seat is used for the trim parts!

Soft seat (O-ring) is used for the trim parts,
ensuring the reliable airtightness of the valve seat.

AL-150TML

Features

1. Lever type safety relief valve. A discharge inspection can be manually performed when the difference between the set pressure and the inlet pressure is as shown in Table 1 below.
2. Excellent airtightness ensured by the valve seat incorporating soft seat. Most suitable for applications where valve seat leakage is not tolerated.
3. The trim parts (valve and valve seat) and adjusting spring are made of stainless steel. Used for the trim parts is SCS14A (equivalent to SUS316) with outstanding corrosion resistance.
4. Simple structure and easy to handle.
5. Closed structure prevents fluid leakage.

Specifications

Structure		Closed type with a lever
Application		Air, Cold and hot water, Oil, Other non-dangerous fluids *
Working pressure		0.05-1.0 MPa
Maximum temperature		120˚C
Material	Spring case	Cast bronze
	Valve, valve seat	Stainless steel (SCS14A)
	Adjusting spring	Stainless steel
	O-ring	FKM
Connection		JIS Rc screwed

* Please contact us when using for oil.

Dimensions and Weights

Nominal size	Dimension (mm)					Flow area $\pi D \ell$ (mm²)	Weight (kg)
	d	L	H_1	H	Seat diameter		
15A	Rc 1/2	34	40	157	16	20.1	0.8
20A	Rc 3/4	38	43	158	21	34.6	0.9
25A	Rc 1	43	51.5	174	26	53.0	1.3
32A	Rc 1-1/4	50	61.5	212	33	93.3	1.9
40A	Rc 1-1/2	60	60	246	41	135.2	3.0
50A	Rc 2	75	76	286	51	208.2	4.9

[Table 1] Required differential pressure at a discharge inspection

Nominal size	Difference between set pressure and inlet pressure
15A-25A	1.0 MPa or less
32A, 40A	0.6 MPa or less
50A	0.4 MPa or less

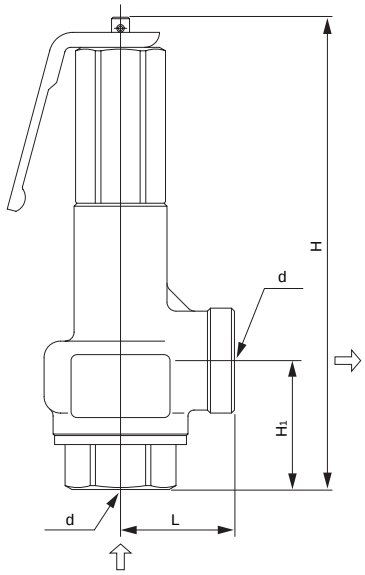

Soft seat is used for the trim parts!

Soft seat (O-ring) is used for the trim parts,
ensuring the reliable airtightness of the valve seat.

Certified Capacity Table

●AL-160・160L for steam (saturation temperature) <Pressure vessel structure standard>

(kg/h)

Nominal size \ Pressure MPa	0.05	0.1	0.2	0.3	0.4	0.5	0.6	0.7	0.8	0.9	1.0
15A	15	20	29	40	50	60	70	80	90	100	109
20A	27	35	51	69	87	104	121	138	155	172	189
25A	42	54	78	105	133	159	186	212	237	263	289
32A	70	91	132	178	224	268	313	356	400	443	487
40A	105	136	198	266	335	402	468	534	599	664	729
50A	163	211	306	411	518	621	723	824	924	1025	1126

●AL-160・160L・150T・150TML for air (20°C) <Pressure vessel structure standard>

(kg/h)

Nominal size \ Pressure MPa	0.05	0.1	0.2	0.3	0.4	0.5	0.6	0.7	0.8	0.9	1.0
15A	25	33	48	65	81	98	114	131	147	164	181
20A	44	57	83	111	140	169	197	226	254	283	311
25A	67	87	127	171	215	258	302	346	390	433	477
32A	113	147	214	288	362	435	509	582	656	730	803
40A	169	221	321	431	542	652	762	872	982	1093	1203
50A	262	341	496	666	836	1006	1176	1346	1516	1687	1857

●AL-160・150T・150TML・150TR for water (accumulation: 25%) <Yoshitake standard>

(m^3/h)

Nominal size \ Pressure MPa	0.05	0.1	0.2	0.3	0.4	0.5	0.6	0.7	0.8	0.9	1.0
15A	0.4	0.5	0.9	1.1	1.3	1.5	1.6	1.8	1.9	2.0	2.1
20A	0.6	0.9	1.6	2.0	2.3	2.6	2.8	3.1	3.3	3.5	3.7
25A	1.0	1.5	2.5	3.1	3.6	4.0	4.4	4.7	5.1	5.4	5.7
32A	1.8	2.6	4.5	5.5	6.3	7.1	7.8	8.4	9.0	9.5	10.0
40A	2.7	3.8	6.5	7.9	9.2	10.3	11.3	12.2	13.0	13.8	14.6
50A	4.1	5.9	10.0	12.3	14.2	15.9	17.4	18.8	20.1	21.3	22.4

・Please contact us for the calculation procedure for nominal size selection.

AL-150H

Features

1. Popping structure ensures reliable discharge.
2. Used for the trim parts is SCS14A (equivalent to SUS316) with outstanding corrosion resistance.
3. Simple internal structure facilitates adjustment, maintenance and handling.
4. Closed structure prevents fluid leakage.

Specifications

Structure		Closed type
Application		Steam, Air, Cold and hot water, Oil, Other non-dangerous fluids
Working pressure		1.0-1.6 MPa
Maximum temperature		220˚C *
Material	Spring case	Cast bronze
	Valve, valve seat	Cast stainless steel (SCS14A)
Connection		JIS Rc screwed

* The maximum temperature is 150˚C when using for water, oil, or other liquids.

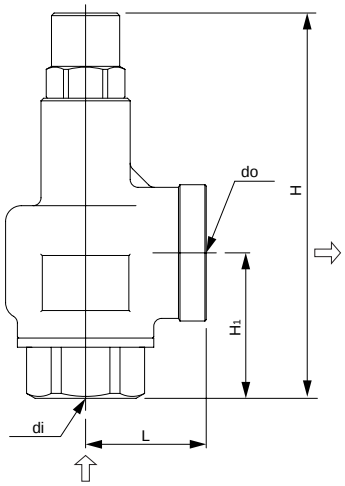

Dimensions and Weights

Nominal size	Dimension (mm)					Flow area $\pi D\ell$ (mm²)	Weight (kg)
	di x do	L	H1	H	Seat diameter		
15A	Rc 1/2 x Rc 3/4	36	42	126	16	22.9	0.8
20A	Rc 3/4 x Rc 1	38	47	131	21	39.5	0.9
25A	Rc 1 x Rc 1-1/4	46	55.5	147.5	26	60.6	1.3
32A	Rc 1-1/4 x Rc 1-1/2	54	61.5	167.5	33	97.7	1.9
40A	Rc 1-1/2 x Rc 2	63	67	193.5	41	150.8	2.9
50A	Rc 2 x Rc 2-1/2	77	80	241.5	51	233.4	5.0

Certified Capacity Table

●For steam (saturation temperature) <Pressure vessel structure standard>

(kg/h)

Pressure MPa / Nominal size	1.0	1.1	1.2	1.3	1.4	1.5	1.6
15A	115	126	136	146	156	167	177
20A	199	217	235	252	270	288	306
25A	306	333	360	387	415	442	469
32A	493	537	581	625	669	713	757
40A	761	830	897	965	1033	1100	1168
50A	1179	1284	1389	1494	1599	1703	1808

●For air (20˚C) <Pressure vessel structure standard>

(kg/h)

Pressure MPa / Nominal size	1.0	1.1	1.2	1.3	1.4	1.5	1.6
15A	190	208	225	243	260	278	295
20A	328	359	389	419	449	479	509
25A	504	550	597	643	689	735	782
32A	813	888	962	1037	1111	1186	1260
40A	1255	1370	1485	1600	1715	1831	1946
50A	1943	2121	2299	2477	2655	2833	3011

●For water (accumulation: 25%) <Yoshitake standard>

(m^3/h)

Pressure MPa / Nominal size	1.0	1.1	1.2	1.3	1.4	1.5	1.6
15A	2.4	2.5	2.7	2.8	2.9	3.0	3.1
20A	4.2	4.4	4.6	4.8	5.0	5.2	5.3
25A	6.5	6.8	7.1	7.4	7.7	8.0	8.2
32A	10.5	11.0	11.5	12.0	12.4	12.9	13.3
40A	16.2	17.0	17.8	18.5	19.2	19.9	20.6
50A	25.2	26.4	27.6	28.7	29.8	30.8	31.8

・Please contact us for the calculation procedure for nominal size selection.

AL-140・140H

Features

1. Safety relief valve of all stainless steel made. Used for the trim parts is SCS14A (equivalent to SUS316) with outstanding corrosion resistance.
2. Popping structure ensures reliable discharge.
3. Simple structure and easy to handle.
4. Closed structure prevents fluid leakage.

Specifications

Model		AL-140	AL-140H
Structure		Closed type	
Application		Steam, Air, Cold and hot water, Oil, Other non-dangerous fluids	
Working pressure		0.05-1.0 MPa	1.0-2.0 MPa
Maximum temperature		220˚C *	
Material	Spring case	Cast stainless steel	
	Valve, valve seat	Cast stainless steel (SCS14A)	
Connection		JIS Rc screwed	

* The maximum temperature is 150˚C when using for water, oil, or other liquids.

AL-140

AL-140H

Dimensions and Weights

● AL-140

Nominal size	Dimension (mm)					Flow area $\pi D \ell$ (mm²)	Weight (kg)
	d	L	H_1	H	Seat diameter		
15A	Rc 1/2	34	40	128.5	16	20.1	0.7
20A	Rc 3/4	38	42	129	21	34.6	0.8
25A	Rc 1	43	51	148	26	53.0	1.1
32A	Rc 1-1/4	50	61.5	182	33	93.3	2.0
40A	Rc 1-1/2	60	64	206	41	135.2	3.0
50A	Rc 2	75	76	246.5	51	208.2	5.0

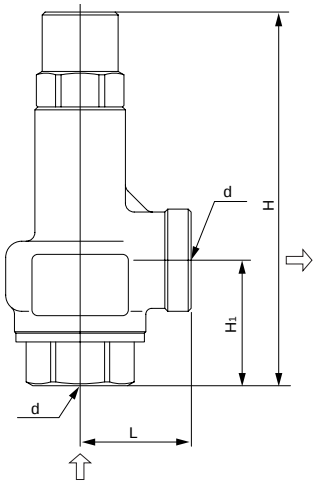

● AL-140H

Nominal size	Dimension (mm)					Flow area $\pi D \ell$ (mm²)	Weight (kg)
	di x do	L	H_1	H	Seat diameter		
15A	Rc 1/2 x Rc 3/4	36	42	126.5	16	20.1	0.9
20A	Rc 3/4 x Rc 1	38	46	130.5	21	34.6	1.0
25A	Rc 1 x Rc 1-1/4	46	55	150.5	26	53.0	1.5
32A	Rc 1-1/4 x Rc 1-1/2	54	61.5	195	33	93.3	2.5
40A	Rc 1-1/2 x Rc 2	63	67	227.5	41	135.2	4.6
50A	Rc 2 x Rc 2-1/2	77	80	303.5	51	208.2	8.8

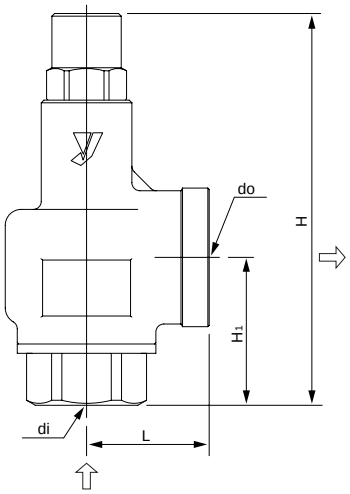

Certified Capacity Table

●For steam (saturation temperature) <Pressure vessel structure standard>

(kg/h)

Pressure MPa / Nominal size	0.05	0.1	0.2	0.3	0.4	0.5	0.6	0.7	0.8	0.9	1.0	1.0	1.1	1.2	1.3	1.4	1.5	1.6	1.7	1.8	1.9	2.0
15A	15	20	29	40	50	60	70	80	90	100	109	109	119	129	139	149	158	168	178	188	198	207
20A	27	35	51	69	87	104	121	138	155	172	189	189	206	222	239	256	273	290	306	324	340	357
25A	42	54	78	105	133	159	186	212	237	263	289	289	315	341	367	393	418	444	470	496	522	547
32A	70	91	132	178	224	268	313	356	400	443	487	487	531	574	617	661	704	747	791	835	878	921
40A	105	136	198	266	335	402	468	534	599	664	729	729	795	860	924	990	1054	1119	1184	1250	1315	1380
50A	163	211	306	411	518	621	723	824	924	1025	1129	1126	1227	1327	1427	1528	1627	1728	1828	1930	2030	2130

●For air (20˚C) <Pressure vessel structure standard>

(kg/h)

Pressure MPa / Nominal size	0.05	0.1	0.2	0.3	0.4	0.5	0.6	0.7	0.8	0.9	1.0	1.0	1.1	1.2	1.3	1.4	1.5	1.6	1.7	1.8	1.9	2.0
15A	25	33	48	65	81	98	114	131	147	164	181	181	197	214	230	247	264	280	297	313	330	347
20A	44	57	83	111	140	169	197	226	254	283	311	311	340	368	397	426	454	483	511	540	568	597
25A	67	87	127	171	215	258	302	346	390	433	477	477	521	565	608	652	696	740	783	827	871	915
32A	113	147	214	288	362	435	509	582	656	730	803	803	877	950	1024	1098	1171	1245	1318	1392	1466	1539
40A	169	221	321	431	542	652	762	872	982	1093	1203	1203	1313	1423	1533	1644	1754	1864	1974	2084	2195	2305
50A	262	341	496	666	836	1006	1176	1346	1516	1687	1857	1857	2027	2197	2367	2537	2707	2877	3047	3217	3388	3558

●For water (accumulation: 25%) <Yoshitake standard>

(m^3/h)

Pressure MPa / Nominal size	0.05	0.1	0.2	0.3	0.4	0.5	0.6	0.7	0.8	0.9	1.0	1.0	1.1	1.2	1.3	1.4	1.5	1.6	1.7	1.8	1.9	2.0
15A	0.4	0.5	0.9	1.1	1.3	1.5	1.6	1.8	1.9	2.0	2.1	2.1	2.2	2.3	2.4	2.5	2.6	2.7	2.8	2.9	2.9	3.0
20A	0.6	0.9	1.6	2.0	2.3	2.6	2.8	3.1	3.3	3.5	3.7	3.7	3.9	4.0	4.2	4.4	4.5	4.7	4.8	5.0	5.1	5.2
25A	1.0	1.5	2.5	3.1	3.6	4.0	4.4	4.7	5.1	5.4	5.7	5.7	6.0	6.2	6.5	6.7	7.0	7.2	7.4	7.6	7.8	8.0
32A	1.8	2.6	4.5	5.5	6.3	7.1	7.8	8.4	9.0	9.5	10.0	10.0	10.5	11.0	11.4	11.9	12.3	12.7	13.1	13.5	13.8	14.2
40A	2.7	3.8	6.5	7.9	9.2	10.3	11.3	12.2	13.0	13.8	14.6	14.6	15.3	15.9	16.6	17.2	17.8	18.4	19.0	19.5	20.1	20.6
50A	4.1	5.9	10.0	12.3	14.2	15.9	17.4	18.8	20.1	21.3	22.4	22.4	23.5	24.6	25.6	26.6	27.5	28.4	29.3	30.1	30.9	31.8

- AL-140: 0.05-1.0 MPa
  AL-140H: 1.0-2.0 MPa
- Please contact us for the calculation procedure for nominal size selection.

AL-140T

Features

1. Safety relief valve of all stainless steel made, offering high corrosion resistance and durability in particular.
2. Excellent airtightness ensured by the valve seat incorporating soft seat. Most suitable for applications where valve seat leakage is not tolerated.
3. Closed structure prevents fluid leakage.

Specifications

Structure		Closed type
Application		Air, Cold and hot water, Oil, Other non-dangerous fluids *
Working pressure		0.05-1.0 MPa
Maximum temperature		120˚C
Material	Spring case	Cast stainless steel
	Valve, valve seat	Cast stainless steel (SCS14A)
	Adjusting spring	Stainless steel
	O-ring	FKM
Connection		JIS Rc screwed

* Please contact us when using for oil.

Dimensions and Weights

Nominal size	Dimension (mm)					Flow area	Weight
	d	L	H_1	H	Seat diameter	$\pi D \ell$ (mm²)	(kg)
15A	Rc 1/2	34	40	128	16	20.1	0.7
20A	Rc 3/4	38	42	128.5	21	34.6	0.8
25A	Rc 1	43	51	148	26	53.0	1.1
32A	Rc 1-1/4	50	61.5	181.5	33	93.3	1.8
40A	Rc 1-1/2	60	64	205	41	135.2	2.8
50A	Rc 2	75	76	245.5	51	208.2	4.7

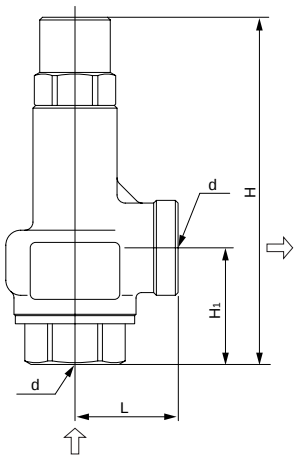

Soft seat is used for the trim parts!

Soft seat (O-ring) is used for the trim parts, ensuring the reliable airtightness of the valve seat.

Certified Capacity Table

●For air (20˚C) <Pressure vessel structure standard> (kg/h)

Nominal size \ Pressure MPa	0.05	0.1	0.2	0.3	0.4	0.5	0.6	0.7	0.8	0.9	1.0
15A	25	33	48	65	81	98	114	131	147	164	181
20A	44	57	83	111	140	169	197	226	254	283	311
25A	68	87	127	171	215	258	302	346	390	433	477
32A	114	147	214	288	362	435	509	582	656	730	803
40A	171	221	321	431	542	652	762	872	982	1093	1203
50A	264	341	496	666	836	1006	1176	1346	1516	1687	1857

●For water (accumulation: 25%) <Yoshitake standard> (m³/h)

Nominal size \ Pressure MPa	0.05	0.1	0.2	0.3	0.4	0.5	0.6	0.7	0.8	0.9	1.0
15A	0.4	0.5	0.9	1.1	1.3	1.5	1.6	1.8	1.9	2.0	2.1
20A	0.6	0.9	1.6	2.0	2.3	2.6	2.8	3.1	3.3	3.5	3.7
25A	1.0	1.5	2.5	3.1	3.6	4.0	4.4	4.7	5.1	5.4	5.7
32A	1.8	2.6	4.5	5.5	6.3	7.1	7.8	8.4	9.0	9.5	10.0
40A	2.7	3.8	6.5	7.9	9.2	10.3	11.3	12.2	13.0	13.8	14.6
50A	4.1	5.9	10.0	12.3	14.2	15.9	17.4	18.8	20.1	21.3	22.4

・Please contact us for the calculation procedure for nominal size selection.

AL-1・1T

Features

1. Reliable discharge operation minimises downtime and maintenance cost.
2. Simple construction enables easy maintenance.
3. Fluoroplastic disc enables tight shutoff for gas and liquid service (AL-1T).

AL-1

Specifications

Model		AL-1	AL-1T
Structure		Open type	Closed type
Application		Steam	Air, Oil, Water, Non-dangerous fluids
Working pressure		0.05-1.0 MPa	
Maximum temperature		220˚C	150˚C
Material	Valve case	Cast iron	
	Valve, valve seat	Cast bronze	PTFE・Cast bronze
Connection		JIS Rc screwed	

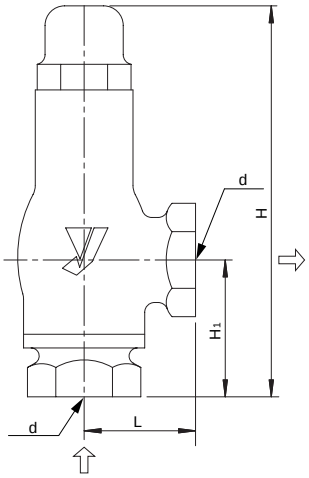

Dimensions and Weights

Nominal size	Dimension (mm)					Flow area	Weight
	d	L	H_1	H	Seat diameter	$\pi D \ell$ (mm²)	(kg)
15A	Rc 1/2	43	55 (56)	170 (172)	23	41.6	1.3
20A	Rc 3/4	57	70 (71)	200 (202)	25 (29)	49.1 (66.1)	2.2
25A	Rc 1	57	70 (71)	200 (202)	25 (29)	49.1 (66.1)	2.2
32A	Rc 1-1/4	70	82 (83)	266 (268)	37	107.6	4.4
40A	Rc 1-1/2	75	90 (91)	272 (274)	38 (37)	113.5 (107.6)	5.1
50A	Rc 2	82	98 (99)	284 (286)	50	196.4	7.1

・The above values in parentheses are the dimensions of the AL-1T.

Certified Capacity Table

●AL-1 for steam (saturation temperature) <Pressure vessel structure standard> (kg/h)

Nominal size \ Pressure MPa	0.05	0.1	0.2	0.3	0.4	0.5	0.6	0.7	0.8	0.9	1.0
15A	32	42	59	78	99	118	138	157	176	195	214
20A	38	50	69	93	117	140	162	185	208	230	253
25A	38	50	69	93	117	140	162	185	208	230	253
32A	84	109	152	204	256	306	357	406	455	505	554
40A	89	115	161	215	270	323	376	429	480	532	585
50A	154	200	278	372	468	560	651	742	832	922	1012

●AL-1T for air (20˚C) <Pressure vessel structure standard> (kg/h)

Nominal size \ Pressure MPa	0.05	0.1	0.2	0.3	0.4	0.5	0.6	0.7	0.8	0.9	1.0
15A	46	65	99	134	168	202	237	271	306	340	374
20A	74	104	158	213	267	322	377	431	486	540	595
25A	74	104	158	213	267	322	377	431	486	540	595
32A	121	169	258	347	436	525	613	702	791	880	969
40A	121	169	258	347	436	525	613	702	791	880	969
50A	221	309	471	634	796	958	1122	1282	1444	1607	1769

●AL-1T for water (accumulation: 25%) <Yoshitake standard> (m³/h)

Nominal size \ Pressure MPa	0.05	0.1	0.2	0.3	0.4	0.5	0.6	0.7	0.8	0.9	1.0
15A	0.5	0.7	1.0	1.2	1.4	1.6	1.8	1.9	2.0	2.2	2.3
20A	0.8	1.1	1.6	2.0	2.3	2.6	2.8	3.0	3.3	3.5	3.6
25A	0.8	1.1	1.6	2.0	2.3	2.6	2.8	3.0	3.3	3.5	3.6
32A	1.3	1.9	2.6	3.2	3.8	4.2	4.6	5.0	5.3	5.7	6.0
40A	1.3	1.9	2.6	3.2	3.8	4.2	4.6	5.0	5.3	5.7	6.0
50A	2.4	3.4	4.9	6.0	6.9	7.7	8.5	9.1	9.8	10.4	10.9

・Please contact us for the calculation procedure for nominal size selection.

AL-10

Features

1. Compact and lightweight lift safety valve, installation is easy.
2. Simple structure and easy maintenance.
3. Due to lift valve lever mechanism a discharge inspection can be manually performed at more than 75% of the opening pressure (open type with a lever).
4. Blowdown can be adjusted with adjustable ring (seat ring).

Specifications

Structure		Open type
Application		Steam
Working pressure		0.05-1.0 MPa
Maximum temperature		220˚C
Material	Spring case	Ductile cast iron
	Valve, valve seat	Cast bronze or stainless steel
Connection		JIS Rc screwed

Open type with a lever

Open type without a lever

Dimensions and Weights

Nominal size	Dimension (mm)						Flow area $\pi D \ell$ (mm^2)	Weight (kg)
	d	L	H_1	H_L	H_X	Seat diameter		
15A	Rc 1/2	40	40	154	142	16	20.1	1.0
20A	Rc 3/4	45	50	173	161	21	34.6	1.5
25A	Rc 1	50	60	193	181	26	53.0	1.8
32A	Rc 1-1/4	60	70	232	219	33	85.5	3.1
40A	Rc 1-1/2	65	75	250	237	41	132.0	4.5
50A	Rc 2	80	85	284	271	51	204.2	6.2

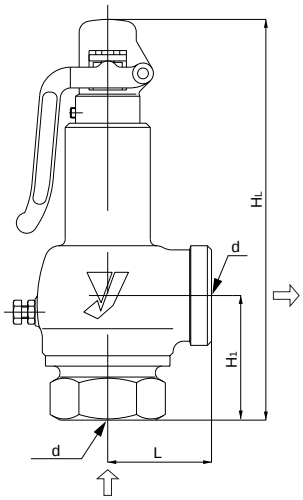

Open type with a lever

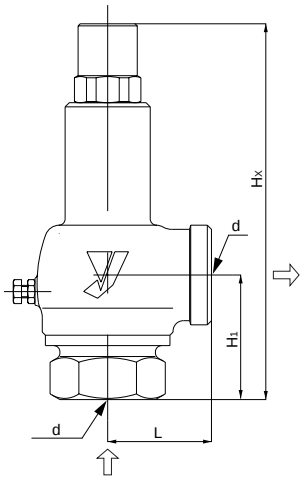

Open type without a lever

Certified Capacity Table

●**For steam (saturation temperature) <Pressure vessel structure standard>** (kg/h)

Nominal size \ Pressure MPa	0.05	0.1	0.2	0.3	0.4	0.5	0.6	0.7	0.8	0.9	1.0
15A	15	20	29	40	50	60	70	80	90	100	109
20A	27	35	51	69	87	104	121	138	155	172	189
25A	42	54	78	105	133	159	186	212	237	263	289
32A	67	87	127	170	215	257	300	342	383	425	467
40A	104	135	196	263	332	397	463	528	592	656	721
50A	161	209	303	407	513	615	716	817	916	1016	1116

・Please contact us for the calculation procedure for nominal size selection.

AL-17

Features

1. Safety relief valve with the trim parts (valve and valve seat) of stainless steel, offering high corrosion resistance and durability in particular.
2. Popping structure ensures reliable discharge.
3. Blowdown can be adjusted with adjustable ring (seat ring).

Specifications

Structure		Closed type
Application		Steam, Air, Cold and hot water, Oil, Other non-dangerous fluids
Working pressure		0.05-1.6 MPa
Maximum temperature		220˚C *
Material	Spring case	Ductile cast iron
	Valve, valve seat	Stainless steel
Connection		JIS Rc screwed

* The maximum temperature is 150˚C when using for water, oil, or other liquids.

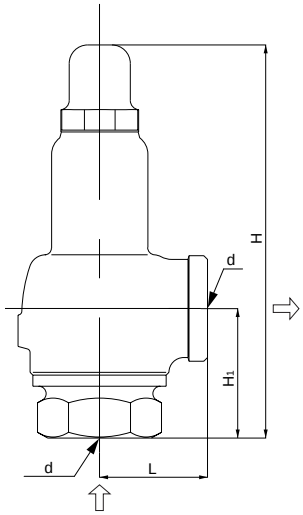

Dimensions and Weights

Nominal size	Dimension (mm)					Flow area $\pi D \ell$ (mm²)	Weight (kg)
	d	L	H_1	H	Seat diameter		
15A	Rc 1/2	40	40	143	16	20.1	0.9
20A	Rc 3/4	45	50	162	21	34.6	1.2
25A	Rc 1	50	60	182	26	53.0	1.7
32A	Rc 1-1/4	60	70	220	33	85.5	2.9
40A	Rc 1-1/2	65	75	238	41	132.0	3.8
50A	Rc 2	80	85	272	51	204.2	6.3

Certified Capacity Table

●For steam (saturation temperature) <Pressure vessel structure standard>

(kg/h)

Nominal size \ Pressure MPa	0.05	0.1	0.2	0.3	0.4	0.5	0.6	0.7	0.8	0.9	1.0	1.1	1.2	1.3	1.4	1.5	1.6
15A	15	20	29	40	50	60	70	80	90	100	109	119	129	139	149	158	168
20A	27	35	51	69	87	104	121	138	155	172	189	206	222	239	256	273	290
25A	42	54	78	105	133	159	186	212	237	263	289	315	341	367	393	418	444
32A	67	87	127	170	215	257	300	342	383	425	467	509	550	592	634	675	716
40A	104	135	196	263	332	397	463	528	592	656	721	786	850	914	979	1042	1106
50A	161	209	303	407	513	615	716	817	916	1016	1116	1216	1315	1414	1514	1612	1712

● For air (20˚C) <Pressure vessel structure standard>

(kg/h)

Nominal size \ Pressure MPa	0.05	0.1	0.2	0.3	0.4	0.5	0.6	0.7	0.8	0.9	1.0	1.1	1.2	1.3	1.4	1.5	1.6
15A	25	33	48	65	81	98	114	131	147	164	181	197	214	230	247	264	280
20A	44	57	83	111	140	169	197	226	254	283	311	340	368	397	426	454	483
25A	68	87	127	171	215	258	302	346	390	433	477	521	565	608	652	696	740
32A	108	141	205	276	347	417	488	558	629	699	770	841	911	982	1052	1123	1193
40A	168	218	317	426	535	644	753	862	971	1080	1189	1298	1407	1516	1625	1734	1843
50A	259	338	491	660	828	997	1166	1334	1503	1671	1840	2008	2177	2345	2514	2682	2851

●For water (accumulation: 25%) <Yoshitake standard>

(m³/h)

Nominal size \ Pressure MPa	0.05	0.1	0.2	0.3	0.4	0.5	0.6	0.7	0.8	0.9	1.0	1.1	1.2	1.3	1.4	1.5	1.6
15A	0.2	0.3	0.5	0.6	0.7	0.8	0.8	0.9	1.0	1.0	1.1	1.1	1.2	1.2	1.3	1.3	1.4
20A	0.4	0.6	0.8	1.0	1.2	1.3	1.5	1.6	1.7	1.8	1.9	2.0	2.1	2.2	2.3	2.3	2.4
25A	0.6	0.9	1.3	1.6	1.8	2.1	2.3	2.5	2.6	2.8	2.9	3.1	3.2	3.4	3.5	3.6	3.7
32A	1.0	1.5	2.1	2.6	3.0	3.4	3.7	4.0	4.3	4.5	4.8	5.0	5.2	5.5	5.7	5.9	6.1
40A	1.6	2.3	3.3	4.0	4.7	5.2	5.7	6.2	6.6	7.0	7.4	7.8	8.1	8.4	8.8	9.1	9.4
50A	2.5	3.6	5.1	6.3	7.2	8.1	8.9	9.6	10.3	10.9	11.5	12.0	12.6	13.1	13.6	14.1	14.5

・Please contact us for the calculation procedure for nominal size selection.

AL-300・301

Features

1. Safety valve, simple structure and easy maintenance.
2. Easy adjustment.

Specifications

Model		AL-300	AL-301
Structure		Closed type	
Application		Steam	
Working pressure		0.05-1.0 MPa	0.05-1.6 MPa
Maximum temperature		220˚C	
Material	Valve case	Ductile cast iron	
	Spring case	Ductile cast iron	
	Valve, valve seat	Cast bronze	Stainless steel
Connection		JIS 10K FF flanged	JIS 10K FF flanged JIS 16K FF flanged *

* JIS 16K FF flanged when working pressure is more than 1.0 MPa.

Dimensions and Weights

Nominal size	Dimension (mm)				Flow area	Weight
	L	H_1	H	Seat diameter	$\pi D \ell$ (mm²)	(kg)
15A	90	108	245	25	49.1	4.7
20A	90	108	245	25	49.1	5.0
25A	90	108	245	25	49.1	6.2
32A	91	115	285	37	107.6	8.6
40A	91	115	285	38	113.5	8.8
50A	105	132	311	50	196.4	12.6

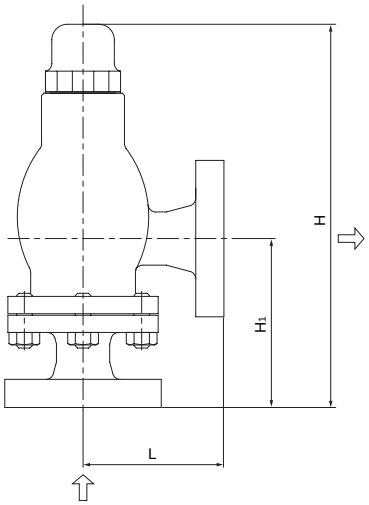

Certified Capacity Table

●For steam (saturation temperature) <Pressure vessel structure standard> (kg/h)

Nominal size \ Pressure MPa	0.05	0.1	0.2	0.3	0.4	0.5	0.6	0.7	0.8	0.9	1.0	1.1	1.2	1.3	1.4	1.5	1.6
15A	38	50	73	98	123	148	172	196	220	244	268	292	316	340	364	387	411
20A	38	50	73	98	123	148	172	196	220	244	268	292	316	340	364	387	411
25A	38	50	73	98	123	148	172	196	220	244	268	292	316	340	364	387	411
32A	85	110	160	214	270	324	377	430	482	535	588	640	693	745	798	849	902
40A	89	116	168	226	285	342	398	454	509	564	620	675	731	786	841	896	951
50A	155	201	292	392	494	592	689	785	881	977	1073	1169	1265	1360	1456	1551	1645

・AL-300: 0.05-1.0 MPa
AL-301: 0.05-1.6 MPa
・Please contact us for the calculation procedure for nominal size selection.

AL-300T・301T

Features

1. Safety relief valve, simple structure and easy maintenance.
2. Easy adjustment.
3. Fluororesin disc ensures reliable seating.

Specifications

Model		AL-300T	AL-301T
Structure		Closed type	
Application		Air, Cold and hot water, Oil, Other non-dangerous fluids	
Working pressure		0.05-1.0 MPa	0.05-1.3 MPa *1
Maximum temperature		150˚C	
Material	Valve case, spring case	Ductile cast iron	
	Valve, valve seat	Cast bronze・PTFE	Stainless steel・PTFE
Connection		JIS 10K FF flanged	JIS 10K FF flanged JIS 16K FF flanged *2

*1 Please contact us if working pressure is between 1.31 MPa and 1.6 MPa.
*2 JIS 16K FF flanged when working pressure is more than 1.0 MPa.

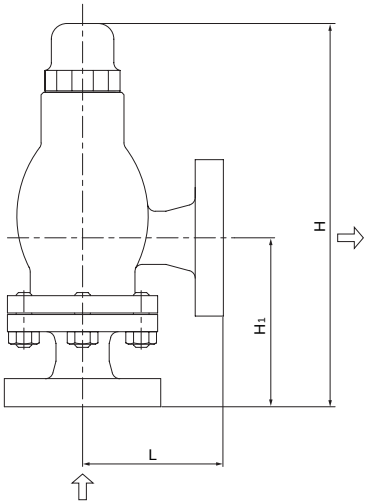

Dimensions and Weights

Nominal size	Dimension (mm)				Flow area $\pi D \ell$ (mm²)	Weight (kg)
	L	H_1	H	Seat diameter		
15A	90	108	245	29	66.1	4.7
20A	90	108	245	29	66.1	5.0
25A	90	108	245	29	66.1	6.2
32A	91	115	285	37	107.6	8.6
40A	91	115	285	37	107.6	8.8
50A	105	132	311	50	196.4	12.6

Certified Capacity Table

● For air (20˚C) <Pressure vessel structure standard>

(kg/h)

Pressure MPa / Nominal size	0.05	0.1	0.2	0.3	0.4	0.5	0.6	0.7	0.8	0.9	1.0	1.1	1.2	1.3	1.4	1.5	1.6
15A	84	109	159	213	268	322	377	432	486	541	595	650	704	759	604	645	685
20A	84	109	159	213	268	322	377	432	486	541	595	650	704	759	604	645	685
25A	84	109	159	213	268	322	377	432	486	541	595	650	704	759	604	645	685
32A	136	178	259	347	436	525	614	703	792	880	969	1058	1147	1236	1324	1413	1502
40A	136	178	259	347	436	525	614	703	792	880	969	1058	1147	1236	1397	1491	1584
50A	249	325	473	635	797	959	1121	1283	1445	1607	1769	1932	2094	2256	2418	2580	2742

●For water (accumulation: 25%) <Yoshitake standard>

(m³/h)

Pressure MPa / Nominal size	0.05	0.1	0.2	0.3	0.4	0.5	0.6	0.7	0.8	0.9	1.0	1.1	1.2	1.3	1.4	1.5	1.6
15A	0.8	1.1	1.6	2.0	2.3	2.6	2.8	3.1	3.3	3.5	3.7	3.9	4.0	4.2	3.2	3.3	3.5
20A	0.8	1.1	1.6	2.0	2.3	2.6	2.8	3.1	3.3	3.5	3.7	3.9	4.0	4.2	3.2	3.3	3.5
25A	0.8	1.1	1.6	2.0	2.3	2.6	2.8	3.1	3.3	3.5	3.7	3.9	4.0	4.2	3.2	3.3	3.5
32A	1.3	1.9	2.7	3.3	3.8	4.2	4.7	5.0	5.4	5.7	6.0	6.3	6.6	6.9	7.1	7.4	7.6
40A	1.3	1.9	2.7	3.3	3.8	4.2	4.7	5.0	5.4	5.7	6.0	6.3	6.6	6.9	7.5	7.8	8.1
50A	2.4	3.5	4.9	6.0	7.0	7.8	8.5	9.2	9.9	10.5	11.0	11.6	12.1	12.6	13.1	13.5	14.0

・AL-300T: 0.05-1.0 MPa
  AL-301T: 0.05-1.6 MPa
・Please contact us for the calculation procedure for nominal size selection.

AL-4・4S

●

Structure		Open type
Application		Steam
Working pressure		0.05-1.5 MPa *1
Maximum temperature		220˚C
Material	Valve case	Ductile cast iron
	Spring case	Ductile cast iron
	Valve, valve seat	Stainless steel
Connection		JIS 10K FF flanged JIS 16K FF flanged *2

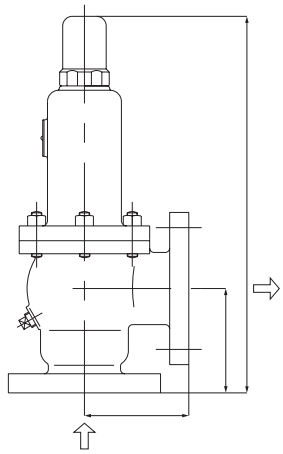

●

Structure		Open type
Application		Steam
Working pressure		0.05-2.0 MPa
Maximum temperature		220˚C
Material	Valve case	Ductile cast iron
	Spring case	Ductile cast iron *
	Valve, valve seat	Stainless steel
Connection		JIS 10K FF flanged JIS 16K FF flanged JIS 20K FF flanged

●

Nominal size	Dimension (mm)				Flow area	Weight (kg)
	L	H_1	H	Seat diameter	$\pi D \ell$ (mm²)	
65A	120	120	432	65	331.9	20
80A	130	130	447	75	441.8	22
100A	160	150	595	100	785.4	44
125A	200	205	779	125	1227.2	88
150A	210	215	835	150	1767.2	113

●

Nominal size	Dimension (mm)				Flow area
	L	H_1	H	Seat diameter	$\pi D \ell$ (mm²)
65A	135	125	442	65	331.9
80A	135	135	457	75	441.8
100A	160	150	597	100	785.4

●

Nominal size	Dimension (mm)				Flow area
	L	H_1	H	Seat diameter	$\pi D \ell$ (mm²)
65A	120	120	432	65	331.9
80A	132	130	449	75	441.8
100A	162	150	597	100	785.4
125A	202	205	781	125	1227.2

AL-4T・4ST

●

Type		Standard	With SUS trim parts
Structure		Closed type	
Application		Air, Cold and hot water, Oil, Other non-dangerous fluids	
Working pressure		0.05-1.0 MPa *1	0.05-1.5 MPa *1 *2
Maximum temperature		150˚C	
Material	Valve case	Ductile cast iron	
	Spring case	Ductile cast iron	
	Valve, valve seat	Cast bronze (PTFE disc incorporated)	Stainless steel (PTFE disc incorporated)
Connection		JIS 10K FF flanged	JIS 10K FF flanged JIS 16K FF flanged *3

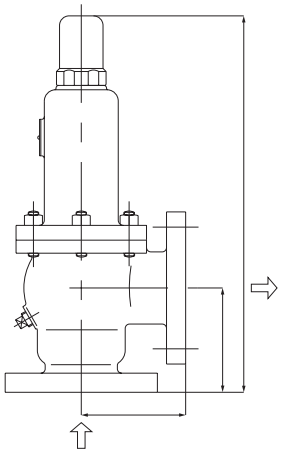

●

Structure		Closed type
Application		Air, Water, Oil, Other non-dangerous fluids
Working pressure		0.05-2.0 MPa *1
Maximum temperature		150˚C
Material	Valve case	Ductile cast iron *2
	Spring case	
	Valve, valve seat	Stainless steel (PTFE disc incorporated)
Connection		JIS 10K FF flanged JIS 16K FF flanged JIS 20K FF flanged

●

Nominal size	Dimension (mm)				Flow area	Weight (kg)
	L	H_1	H	Seat diameter	$\pi D \ell$ (mm²)	
65A	120	120	434	65	331.9	20
80A	130	130	449	75	441.8	22
100A	160	150	597	100	785.4	44
125A	200	205	781	125	1227.2	88
150A	210	215	837	150	1767.2	113

●

Nominal size	Dimension (mm)				Flow area
	L	H_1	H	Seat diameter	$\pi D \ell$ (mm²)
65A	135	125	444	65	331.9
80A	135	135	459	75	441.8
100A	160	150	599	100	785.4

●

Nominal size	Dimension (mm)				Flow area
	L	H_1	H	Seat diameter	$\pi D \ell$ (mm²)
65A	120	120	434	65	331.9
80A	132	130	451	75	441.8
100A	162	150	599	100	785.4
125A	202	205	783	125	1227.2

Certified Capacity Table for AL-4·4S

●For steam (saturation temperature) <Pressure vessel structure standard>

(kg/h)

Pressure MPa / Nominal size	0.05	0.1	0.2	0.3	0.4	0.5	0.6	0.7	0.8	0.9	1.0
65A	263	340	493	663	834	1000	1165	1328	1489	1651	1814
80A	350	452	657	882	1111	1331	1550	1767	1983	2198	2415
100A	622	804	1168	1569	1975	2367	2756	3142	3525	3908	4294
125A	972	1257	1826	2451	3086	3699	4307	4910	5508	6107	6709
150A	1400	1810	2629	3530	4445	5327	6203	7071	7932	8794	9661

(kg/h)

Pressure MPa / Nominal size	1.1	1.2	1.3	1.4	1.5	1.6	1.7	1.8	1.9	2.0
65A	1976	2138	2299	2461	2621	2783	2944	3108	3269	3430
80A	2631	2846	3060	3276	3489	3704	3919	4138	4352	4566
100A	4677	5059	5440	5825	6203	6586	6968	7357	7737	8118
125A	7309	7906	8500	9102	9692	10290	10887	11495	12090	12684
150A	10525	11385	12241	13107	13957	14818	15678	16553	17410	18266

・The nominal sizes of the AL-4S are 65A to 100A.

Certified Capacity Table for AL-4T·4ST

●For air (20˚C) <Pressure vessel structure standard>

(kg/h)

Pressure MPa / Nominal size	0.05	0.1	0.2	0.3	0.4	0.5	0.6	0.7	0.8	0.9	1.0
65A	422	550	799	1073	1347	1621	1895	2169	2443	2717	2991
80A	562	732	1064	1428	1793	2158	2522	2887	3252	3616	3981
100A	999	1302	1891	2540	3188	3836	4484	5133	5781	6429	7077
125A	1562	2035	2955	3968	4981	5994	7007	8020	9033	10046	11059
150A	2249	2930	4256	5715	7173	8632	10091	11549	13008	14467	15925

(kg/h)

Pressure MPa / Nominal size	1.1	1.2	1.3	1.4	1.5	1.6	1.7	1.8	1.9	2.0
65A	3264	3538	3812	4086	4360	4364	4908	5182	5456	5730
80A	4346	4710	5075	5440	5804	6169	6534	6898	7263	7628
100A	7726	8374	9022	9671	10319	10967	11615	12264	12912	13560
125A	12072	13085	14098	15111	16124	17136	18149	19162	20175	21188
150A	17384	18843	20301	21760	23219	24677	26136	27594	29053	30512

●For water (accumulation: 25%) <Yoshitake standard>

(m^3/h)

Pressure MPa / Nominal size	0.05	0.1	0.2	0.3	0.4	0.5	0.6	0.7	0.8	0.9	1.0
65A	4.1	5.9	8.3	10.2	11.8	13.2	14.5	15.6	16.7	17.7	18.7
80A	5.5	7.8	11.1	13.6	15.7	17.6	19.3	20.8	22.3	23.6	24.9
100A	9.9	14.0	19.8	24.2	28.0	31.3	34.3	37.0	39.6	42.0	44.3
125A	15.4	21.9	30.9	37.9	43.8	48.9	53.6	57.9	61.9	65.7	69.2
150A	22.3	31.5	44.6	54.6	63.0	70.5	77.2	83.4	89.2	—	—

(kg/h)

Pressure MPa / Nominal size	1.1	1.2	1.3	1.4	1.5	1.6	1.7	1.8	1.9	2.0
65A	19.6	20.5	21.3	22.1	22.9	23.6	24.4	25.1	25.8	26.4
80A	26.1	27.3	28.4	29.5	30.5	31.5	32.5	33.4	34.3	35.2
100A	46.4	48.5	50.5	52.4	54.2	56.0	57.8	59.4	61.1	62.6
125A	72.6	75.8	78.9	81.9	84.8	—	—	—	—	—
150A	—	—	—	—	—	—	—	—	—	—

・The nominal sizes of the AL-4ST are 65A to 100A.
・Please contact us for the calculation procedure for nominal size selection.

AL-5

Structure		Open type with a lever
Application		Steam
Working pressure		0.05-1.5 MPa
Maximum temperature		220˚C
Material	Valve case	Ductile cast iron
	Spring case	Ductile cast iron
	Valve, valve seat	Stainless steel
Connection		JIS 10K FF flanged JIS 16K FF flanged *

Nominal size	Dimension (mm)				Flow area $\pi D \ell$ (mm^2)
	L	H_1	H	Seat diameter	
20A	90	75	276	21	34.6
25A	95	90	295	25	49.1
32A	100	95	331	35	96.2
40A	110	105	347	40	125.6
50A	115	110	388	50	196.4

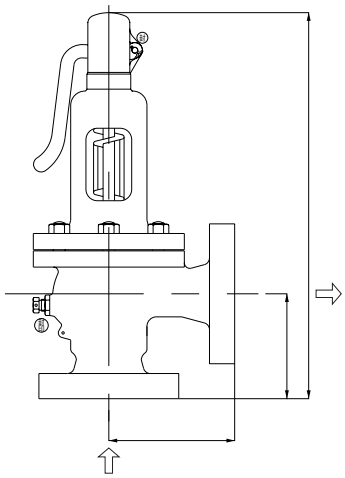

●

Nominal size \ Pressure MPa	0.05	0.1	0.2	0.3	0.4	0.5	0.6	0.7	0.8	0.9	1.0	1.1	1.2	1.3	1.4	1.5
20A	27	35	51	69	87	104	121	138	155	172	189	206	222	239	256	273
25A	38	50	73	98	123	148	172	196	220	244	268	292	316	340	364	387
32A	76	98	143	192	241	290	337	384	431	478	525	572	619	666	713	759
40A	99	128	186	250	315	378	440	502	563	625	686	748	809	870	931	991
50A	155	201	292	392	494	592	689	785	881	977	1073	1169	1265	1360	1456	1551

Nominal size \ Pressure MPa	0.05	0.1	0.2	0.3	0.4	0.5	0.6	0.7	0.8	0.9	1.0	1.1	1.2	1.3	1.4	1.5
20A	26	34	50	66	83	98	114	130	146	162	178	194	209	225	241	257
25A	37	49	71	94	117	140	163	185	208	230	253	275	297	320	342	365
32A	74	96	140	185	230	274	319	363	407	451	495	539	583	627	671	715
40A	96	125	183	242	301	358	416	474	532	589	647	704	762	819	876	934
50A	151	196	287	378	471	560	652	742	832	921	1012	1102	1191	1280	1371	1461

•

AL-6

Features

1. Lift safety valve, designed in compliance with JIS B 8210 "Spring loaded safety valves for steam boilers and pressure vessels".
2. Due to lift lever mechanism a discharge inspection can be manually performed at more than 75% of the opening pressure.

Specifications

Structure		Open type with a lever
Application		Steam
Working pressure		0.05-1.5 MPa *1
Maximum temperature		220˚C
Material	Valve case	Ductile cast iron
	Spring case	Ductile cast iron
	Valve, valve seat	Cast stainless steel
Connection		JIS 10K FF flanged JIS 16K FF flanged *2

*1 Maximum working pressure for 150A is 0.8 MPa.
*2 JIS 16K FF flanged when working pressure is more than 1.0 MPa.

Dimensions and Weights

Nominal size	Dimension (mm)				Flow area	Weight
	L	H1	H	Seat diameter	$\pi D \ell$ (mm²)	(kg)
65A	120	120	479	65	331.9	20.2
80A	130	130 (132)	493 (495)	75	441.8	24.0
100A	160	150 (152)	626 (628)	100	785.4	44.0
125A	200	205 (207)	835 (837)	125	1227.2	88.0
150A	210	215 (217)	845 (847)	150	1767.2	113.0

・The values in parentheses are the dimensions of JIS 16K FF flanged.

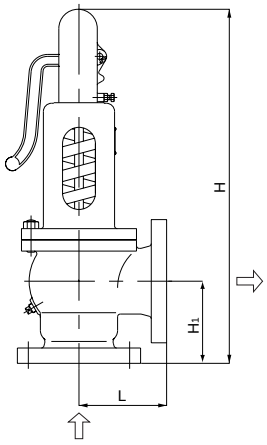

65A・80A

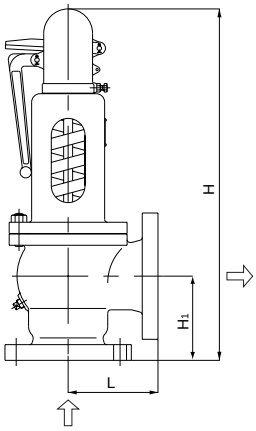

100A-150A

Certified Capacity Table

● **For steam (saturation temperature) <Pressure vessel structure standard>** (kg/h)

Nominal size \ Pressure MPa	0.05	0.1	0.2	0.3	0.4	0.5	0.6	0.7	0.8	0.9	1.0	1.1	1.2	1.3	1.4	1.5
65A	263	340	493	663	834	1000	1165	1328	1489	1651	1814	1976	2138	2299	2461	2621
80A	350	452	657	882	1111	1331	1550	1767	1983	2198	2415	2631	2846	3060	3276	3489
100A	622	804	1168	1569	1975	2367	2756	3142	3525	3908	4294	4677	5059	5440	5825	6203
125A	972	1257	1826	2451	3086	3699	4307	4910	5508	6107	6709	7309	7906	8500	9102	9692
150A	1400	1810	2629	3530	4445	5327	6203	7071	7932	8794	9661	10525	11385	12241	13107	13957

<Boiler structure standard> (kg/h)

Nominal size \ Pressure MPa	0.05	0.1	0.2	0.3	0.4	0.5	0.6	0.7	0.8	0.9	1.0	1.1	1.2	1.3	1.4	1.5
65A	255	332	486	640	796	947	1101	1254	1407	1557	1710	1862	2013	2164	2317	2469
80A	339	442	647	851	1059	1261	1466	1670	1873	2073	2276	2479	2680	2881	3084	3286
100A	604	786	1150	1514	1884	2242	2607	2968	3330	3686	4047	4407	4765	5122	5483	5843
125A	944	1228	1797	2366	2944	3504	4074	4638	5204	5760	6324	6886	7446	8003	8567	9129
150A	1359	1769	2588	3407	4239	5046	5866	6680	7494	8295	9107	9917	10723	11525	12337	13147

・Please contact us for the calculation procedure for nominal size selection.

AL-31・31H

Features

1. Safety relief valve of all stainless steel made, offering high corrosion resistance and durability in particular.
2. Popping structure ensures reliable discharge.

Specifications

Model		AL-31	AL-31H
Structure		Closed type	
Application		Steam, Air, Cold and hot water, Oil, Other non-dangerous fluids	
Working pressure		0.05-1.0 MPa	1.0-2.0 MPa
Maximum temperature		220˚C *	
Material	Valve case	Cast stainless steel	
	Spring case	Cast stainless steel	
	Valve, valve seat	Stainless steel	
Connection		JIS 10K RF flanged	JIS 16K RF flanged JIS 20K RF flanged

* The maximum temperature is 150˚C when using for water, oil, or other liquids.

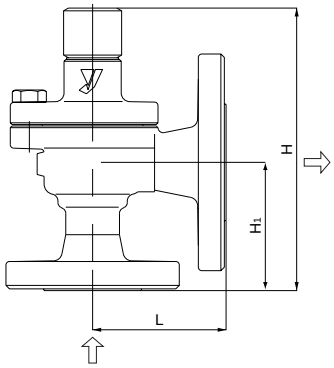

Dimensions and Weights

Nominal size	Dimension (mm)					Flow area $\pi D \ell$ (mm²)	Weight (kg)
	Inlet diameter x Outlet diameter	L	H1	H	Seat diameter		
15A	15 x 20	73	72	160	16	20.1	3.4
20A	20 x 25	77	74	163	21	34.6	4.5
25A	25 x 32	91	87	187	26	53.0	6.5
32A	32 x 40	96	92	238	33	85.5	8.1 (8.3)
40A	40 x 50	114	100	277	41	132.0	11.4 (11.7)
50A	50 x 65	116	107	315 (357)	51	204.2	15.0 (18.0)

・The above values in parentheses are the dimensions and weights of JIS 20K RF flanged.

Certified Capacity Table

●For steam (saturation temperature) <Pressure vessel structure standard>

(kg/h)

Nominal size \ Pressure MPa	0.05	0.1	0.2	0.3	0.4	0.5	0.6	0.7	0.8	0.9	1.0	1.0	1.1	1.2	1.3	1.4	1.5	1.6	1.7	1.8	1.9	2.0
15A	15	20	29	40	50	60	70	80	90	100	109	109	119	129	139	149	158	168	178	188	198	207
20A	27	35	51	69	87	104	121	138	155	172	189	189	206	222	239	256	273	290	306	324	340	357
25A	42	54	78	105	133	159	186	212	237	263	289	289	315	341	367	393	418	444	470	496	522	547
32A	67	87	127	170	215	257	300	342	383	425	467	467	509	550	592	634	675	716	758	800	842	883
40A	104	135	196	263	332	397	463	528	592	656	721	721	786	850	914	979	1042	1106	1171	1236	1300	1364
50A	161	209	303	407	513	615	716	817	916	1016	1116	1116	1216	1315	1414	1514	1612	1712	1811	1912	2011	2110

●For air (20˚C) <Pressure vessel structure standard>

(kg/h)

Nominal size \ Pressure MPa	0.05	0.1	0.2	0.3	0.4	0.5	0.6	0.7	0.8	0.9	1.0	1.0	1.1	1.2	1.3	1.4	1.5	1.6	1.7	1.8	1.9	2.0
15A	25	33	48	65	81	98	114	131	147	164	181	181	197	214	230	247	264	280	297	313	330	347
20A	44	57	83	111	140	169	197	226	254	283	311	311	340	368	397	426	454	483	511	540	568	597
25A	67	87	127	171	215	258	302	346	390	433	477	477	521	565	608	652	696	740	783	827	871	915
32A	108	141	205	276	347	417	488	558	629	699	770	770	841	911	982	1052	1123	1193	1264	1335	1405	1476
40A	168	218	317	426	535	644	753	862	971	1080	1189	1189	1298	1407	1516	1625	1734	1843	1952	2061	2170	2279
50A	259	338	491	660	828	997	1166	1334	1503	1671	1840	1840	2008	2177	2345	2514	2682	2851	3020	3188	3357	3525

●For water (accumulation: 25%) <Internal standard>

(m³/h)

Nominal size \ Pressure MPa	0.05	0.1	0.2	0.3	0.4	0.5	0.6	0.7	0.8	0.9	1.0	1.0	1.1	1.2	1.3	1.4	1.5	1.6	1.7	1.8	1.9	2.0
15A	0.2	0.3	0.5	0.6	0.7	0.8	0.8	0.9	1.0	1.0	1.1	1.1	1.1	1.2	1.2	1.3	1.3	1.4	1.4	1.5	1.5	1.6
20A	0.4	0.6	0.8	1.0	1.2	1.3	1.5	1.6	1.7	1.8	1.9	1.9	2.0	2.1	2.2	2.3	2.3	2.4	2.5	2.6	2.6	2.7
25A	0.6	0.9	1.3	1.6	1.8	2.1	2.3	2.5	2.6	2.8	2.9	2.9	3.1	3.2	3.4	3.5	3.6	3.7	3.9	4.0	4.1	4.2
32A	1.0	1.5	2.1	2.6	3.0	3.4	3.7	4.0	4.3	4.5	4.8	4.8	5.0	5.2	5.5	5.7	5.9	6.1	6.2	6.4	6.6	6.8
40A	1.6	2.3	3.3	4.0	4.7	5.2	5.7	6.2	6.6	7.0	7.4	7.4	7.8	8.1	8.4	8.8	9.1	9.4	9.7	9.9	10.0	10.5
50A	2.5	3.6	5.1	6.3	7.2	8.1	8.9	9.6	10.3	10.9	11.5	11.5	12.0	12.6	13.1	13.6	14.1	14.5	15.0	15.4	15.8	16.3

・AL-31: 0.05-1.0 MPa AL-31H: 1.0-2.0 MPa
・Please contact us for the calculation procedure for nominal size selection.

AL-27

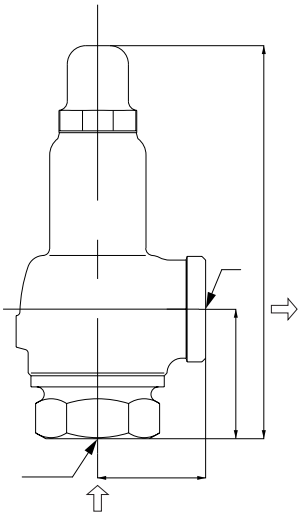

Structure		Closed type
Application		Cold and hot water, Oil, Other non-dangerous fluids
Working pressure		0.05-1.6 MPa
Maximum temperature		120˚C
Material	Valve case	Ductile cast iron
	Spring case	Ductile cast iron
	Valve, valve seat	Stainless steel
Connection		JIS Rc screwed

Nominal size	d	L	H_1	H	Weight (kg)
15A	Rc 1/2	40	40	143	0.9
20A	Rc 3/4	45	50	162	1.3
25A	Rc 1	50	60	182	1.7
32A	Rc 1-1/4	60	70	220	2.9
40A	Rc 1-1/2	65	75	238	3.9
50A	Rc 2	80	85	272	6.4

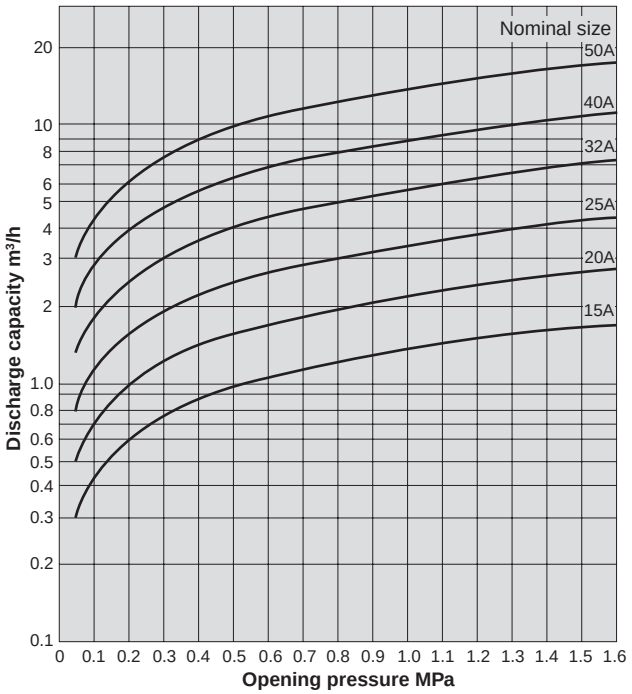

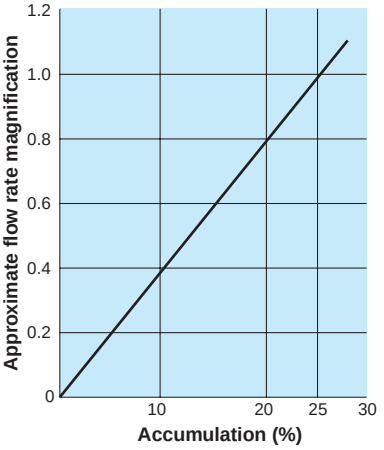

AL-260・260R

Model		AL-260	AL-260R
Structure		Closed type	Closed type with a handle
Application		Cold and hot water, Oil, Other non-dangerous fluids	
Working pressure		0.05-1.0 MPa	
Maximum temperature		120˚C	
Material	Valve case	Cast bronze	
	Spring case	Cast bronze	
	Valve, valve seat	Stainless steel	
Connection		JIS Rc screwed	

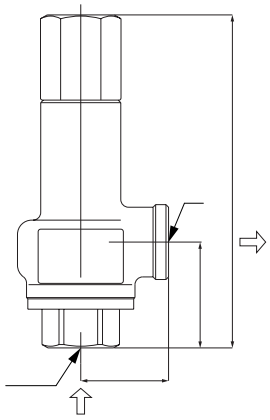

Nominal size	d	L	H_1	H	Weight (kg)
15A	Rc 1/2	34	41.0	129 (185)	0.7 (1.0)
20A	Rc 3/4	38	45.0	131 (187)	0.9 (1.2)
25A	Rc 1	43	51.5	145 (200)	1.2 (1.5)
32A	Rc 1-1/4	50	63.5	184 (241)	1.9 (2.2)
40A	Rc 1-1/2	60	68.5	210 (278)	2.8 (3.2)
50A	Rc 2	75	80.0	250 (314)	4.9 (5.3)

・

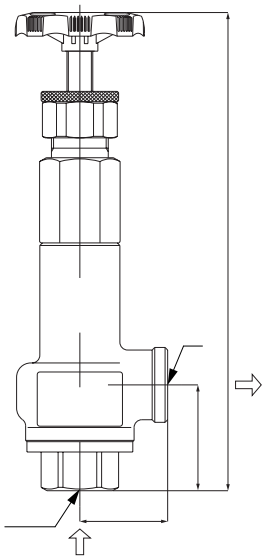

AL-250・250R

Model		AL-250	AL-250R
Structure		Closed type	Closed type with a handle
Application		Cold and hot water, Oil, Other non-dangerous fluids	
Working pressure		0.05-1.0 MPa	
Maximum temperature		120˚C	
Material	Spring case	Cast stainless steel	
	Valve, valve seat	Stainless steel	
Connection		JIS Rc screwed	

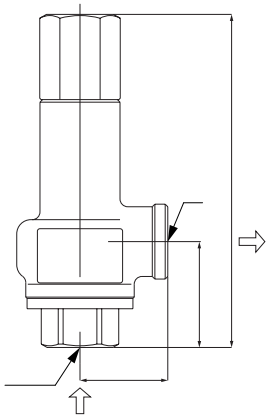

Nominal size	d	L	H_1	H	Weight (kg)
15A	Rc 1/2	34	41.0	129 (185)	0.7 (0.9)
20A	Rc 3/4	38	45.0	132 (188)	0.9 (1.1)
25A	Rc 1	43	51.5	148 (203)	1.2 (1.4)
32A	Rc 1-1/4	50	63.5	184 (241)	2.2 (2.5)
40A	Rc 1-1/2	60	68.5	210 (278)	3.2 (3.7)
50A	Rc 2	75	80.0	250 (314)	5.6 (6.0)

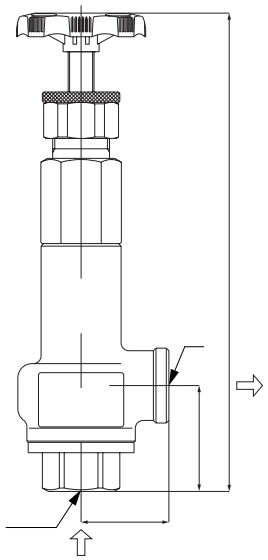

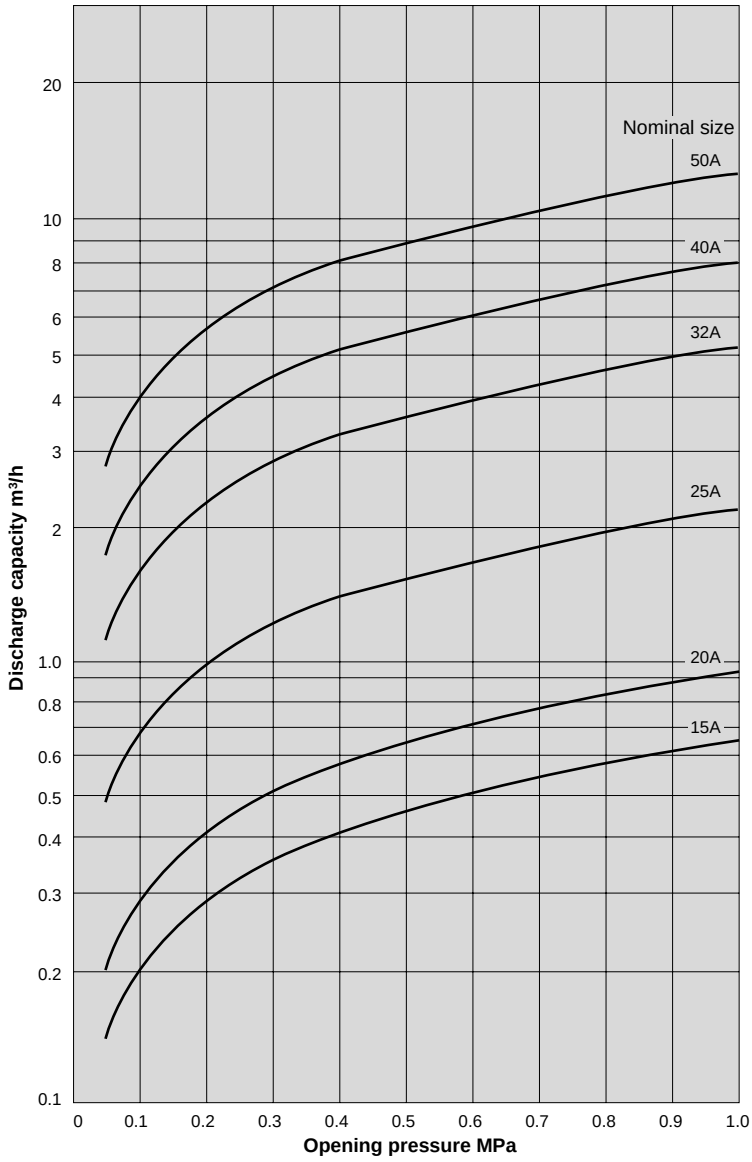

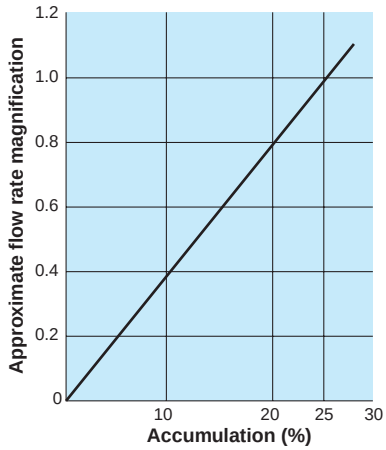

Nominal size	Opening pressure (MPa)										
	0.05	0.1	0.2	0.3	0.4	0.5	0.6	0.7	0.8	0.9	1.0
15A	0.14	0.20	0.29	0.35	0.41	0.46	0.50	0.54	0.58	0.62	0.65
20A	0.20	0.29	0.41	0.51	0.59	0.66	0.72	0.78	0.83	0.88	0.93
25A	0.49	0.69	0.98	1.20	1.38	1.54	1.69	1.83	1.96	2.07	2.19
32A	1.14	1.62	2.29	2.81	3.24	3.63	3.97	4.29	4.59	4.87	5.13
40A	1.79	2.53	3.58	4.39	5.07	5.67	6.21	6.71	7.17	7.61	8.02
50A	2.80	3.96	5.60	6.86	7.92	8.86	9.71	10.49	11.21	11.89	12.53

AL-280

Structure		Closed type
Application		Cold and hot water, Oil (heavy oil A, heavy oil B, kerosene)
Working pressure		0.05-1.0 MPa
Maximum temperature		120˚C
Material	Valve case	Ductile cast iron
	Spring case	Ductile cast iron
	Valve, valve seat	Stainless steel
	Adjusting spring	Stainless steel
Connection		JIS 10K FF flanged

Nominal size	L	H	H_1	Weight (kg)
15A	90	245	108	4.7
20A	90	245	108	5.0
25A	90	245	108	6.2
32A	91	285	115	8.6
40A	91	285	115	8.8
50A	105	331	132	13.0

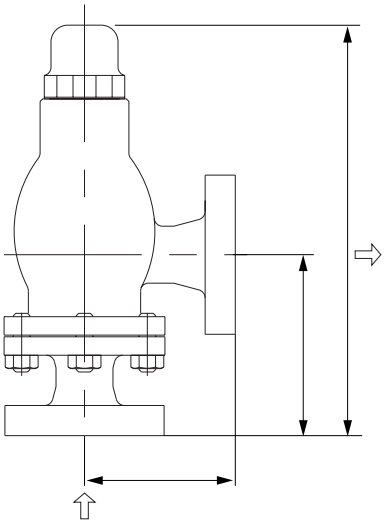

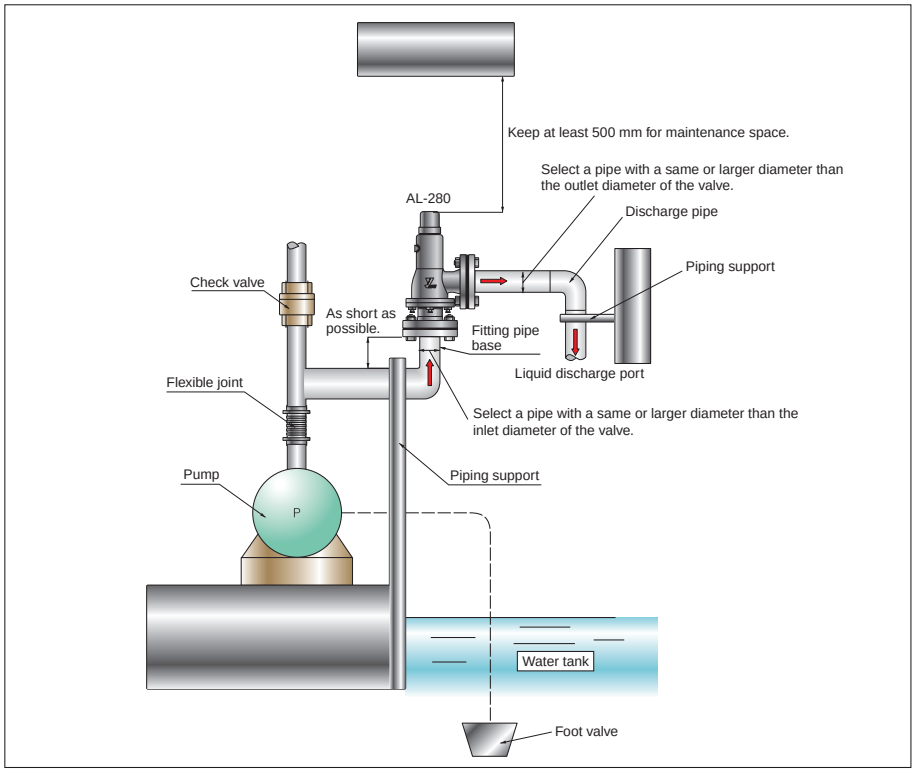

●

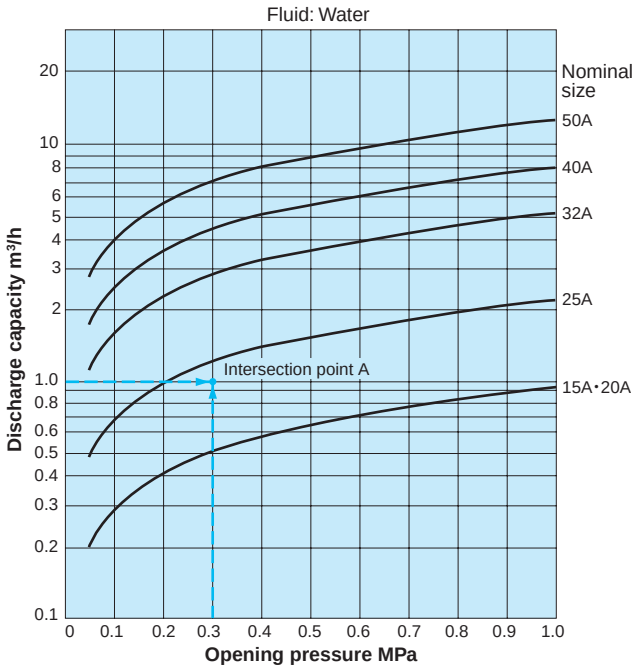

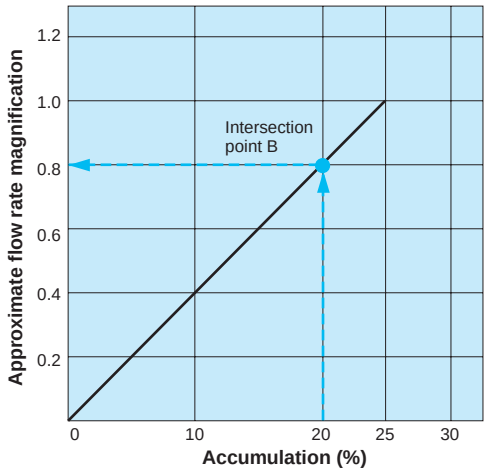

●

Nominal size	Flow area (mm²)	Opening pressure (MPa)										
		0.05	0.1	0.2	0.3	0.4	0.5	0.6	0.7	0.8	0.9	1.0
15A･20A	16.7	0.20	0.29	0.41	0.51	0.59	0.66	0.72	0.78	0.83	0.88	0.93
25A	36.2	0.49	0.69	0.98	1.20	1.38	1.54	1.69	1.83	1.96	2.07	2.19
32A	91.9	1.14	1.62	2.29	2.81	3.24	3.63	3.97	4.29	4.59	4.87	5.13
40A	143.6	1.79	2.53	3.58	4.39	5.07	5.67	6.21	6.71	7.17	7.61	8.02
50A	224.3	2.80	3.96	5.60	6.86	7.92	8.86	9.71	10.49	11.21	11.89	12.53

●Set pressure range for each model

(MPa)

Model	Size	A	B	C	D	E	F	G	H
AL-1・1T	15A	0.05-0.25	0.26-0.4	0.41-0.75	0.76-1.0				
	20A-50A	0.05-0.25	0.26-0.5	0.51-0.75	0.76-1.0				
AL-160 AL-160L	15A-50A	0.05-0.2	0.21-0.4	0.41-0.7	0.66-1.0				
AL-150 AL-150L AL-140	15A	0.05-0.2	B1: 0.21-0.3 B2: 0.31-0.4	0.41-0.55	0.56-0.75	0.76-1.0			
	20A	0.05-0.2	0.21-0.35	0.36-0.45	0.46-0.6	0.61-0.75	0.76-1.0		
	25A	0.05-0.2	0.21-0.35	0.36-0.45	0.46-0.55	0.56-0.8	0.81-1.0		
	32A	0.05-0.2	B1: 0.21-0.3 B2: 0.31-0.4	0.41-0.65	0.66-1.0				
	40A・50A	0.05-0.2	B1: 0.21-0.3 B2: 0.31-0.4	0.41-0.65	0.66-0.8	0.81-1.0			
AL-150H・150HL	15A						1.0-1.6		
	20A・25A							1.0-1.6	
	32A					1.0-1.6			
	40A・50A						1.0-1.6		
AL-140H	15A						1.0-1.3	1.31-2.0	
	20A・25A							1.0-1.6	1.61-2.0
	32A					1.0-1.6	1.61-2.0		
	40A						1.0-1.6	1.61-2.0	
AL-150T・150TR AL-150TML AL-140T AL-250・250R AL-260・260R	15A	0.05-0.2	0.21-0.4	0.41-0.55	0.56-0.75	0.76-1.0			
	20A	0.05-0.2	0.21-0.35	0.36-0.45	0.46-0.6	0.61-0.75	0.76-1.0		
	25A	0.05-0.2	0.21-0.35	0.36-0.45	0.46-0.55	0.56-0.8	0.81-1.0		
	32A	0.05-0.2	0.21-0.4	0.41-0.65	0.66-1.0				
	40A・50A	0.05-0.2	0.21-0.4	0.41-0.65	0.66-0.8	0.81-1.0			
AL-17・27	15A-50A	0.05-0.2	0.21-0.4	0.41-0.65	0.66-1.0	1.01-1.6			
AL-10	15A-40A	0.05-0.2	0.21-0.4	0.41-0.65	0.66-1.0				
	50A	0.05-0.1 0.11-0.2							
AL-31・31H	15A	0.05-0.15	0.16-0.25	0.36-0.45	0.56-0.65	0.76-0.85	1.0-1.3	1.31-1.6	
			0.26-0.35	0.46-0.55	0.66-0.75	0.86-1.0		1.61-2.0	
	20A	0.05-0.2	0.21-0.3		0.31-0.4 0.41-0.5	0.51-0.7	0.71-1.0	1.0-1.3 1.31-1.6	1.61-2.0
	25A	0.05-0.2	0.21-0.3	0.31-0.45	0.46-0.55	0.56-0.65 0.66-0.8	0.81-1.0	1.0-1.6	1.61-2.0
	32A-50A	0.05-0.2	0.21-0.3	0.31-0.5	0.51-0.65	0.66-0.8	0.81-1.0	1.0-1.6	1.61-2.0
AL-300・301	15A-50A	0.05-0.25	0.26-0.5	0.51-0.75	0.76-1.5				
AL-300T・301T	15A-50A	0.05-0.25	0.26-0.5	0.51-0.75	0.76-1.3				
AL-280	15A	0.05-0.2	0.21-0.35	0.36-0.45	0.46-0.6	0.61-0.75	0.76-1.0		
	20A	0.05-0.2	0.21-0.35	0.36-0.45	0.46-0.6	0.61-0.75	0.76-1.0		
	25A	0.05-0.2	0.21-0.35	0.36-0.45	0.46-0.55	0.56-0.8	0.81-1.0		
	32A	0.05-0.2	0.21-0.4	0.41-0.65	0.66-1.0				
	40A-50A	0.05-0.2	0.21-0.4	0.41-0.65	0.66-0.8	0.81-1.0			
AL-4・4T・6	65A	0.05-0.1	0.11-0.25	0.26-0.55	0.56-1.0	1.01-1.5			
	80A-125A	0.05-0.1	0.11-0.2	0.21-0.4	0.41-0.8	0.81-1.5			
	150A	0.05-0.1	0.11-0.2	0.21-0.4	0.41-0.8				
AL-4S・4ST	65A	0.05-0.1	0.11-0.25	0.26-0.55	0.56-1.0	1.01-2.0			
	80A・100A	0.05-0.1	0.11-0.2	0.21-0.4	0.41-0.8	0.81-1.6	1.61-2.0		
AL-5	20A	0.05-0.12	0.13-0.21	0.22-0.35	0.36-0.63	0.64-1.0		1.01-1.5	
	25A	0.05-0.08	0.09-0.15	0.16-0.25	0.26-0.45	0.46-0.75	0.76-1.0	1.01-1.1	1.11-1.5
	32A	0.05-0.08	0.09-0.17	0.18-0.25	0.26-0.45	0.46-0.75	0.76-1.0	1.01-1.1	1.11-1.5
	40A	0.05-0.08	0.09-0.15	0.16-0.4	0.41-0.7	0.71-1.0		1.01-1.1	1.11-1.5
	50A	0.05-0.09	0.1-0.25	0.26-0.5	0.51-0.7	0.71-1.0 1.01-1.1	1.11-1.5		

Safety Relief Valve

AF-5・5S

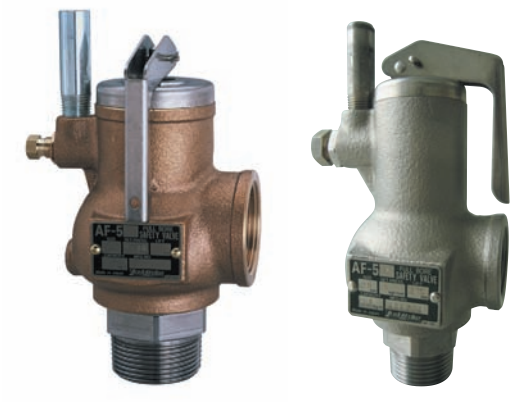

	-	-	-

Nominal size	di x Throat diameter x do	Flow area $\frac{\pi}{4}$dt (mm)	Lift ℓ (mm)	Dimension(mm)				
				L				
20A	R 1 x 15 x Rc 1	176.6	3.3	38	61	136		1.24
25A	x 19 x Rc	283.3	4.4		70	157		1.88
32A	x 24 x Rc	452.1	5.5	52	80	183		2.62
40A	R 2 x 30 x Rc 2	706.5	6.8	65	98	216		
50A	x 38 x Rc 2-1/2	1133.5	8.7	77	121	262		

・
・

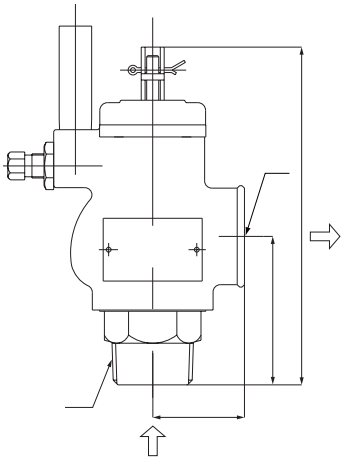

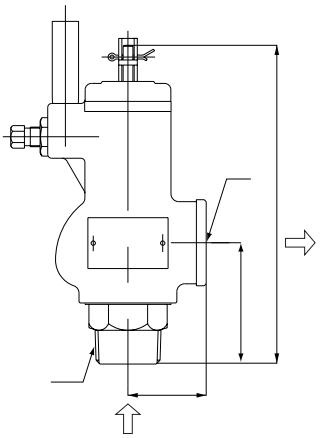

Certified Capacity Table

●For steam (saturation temperature) <Pressure vessel structure standard>

(kg/h)

Nominal size \ Pressure MPa	0.1	0.2	0.3	0.4	0.5	0.6	0.7	0.8	0.9	1.0	1.1	1.2	1.3	1.4	1.5	1.6
20A	159	231	310	390	468	545	621	697	773	849	925	1001	1076	1152	1227	1303
25A	255	370	498	627	751	875	997	1118	1240	1362	1484	1606	1726	1849	1968	2090
32A	407	591	794	1000	1199	1396	1591	1785	1979	2175	2369	2562	2755	2950	3142	3336
40A	636	925	1242	1563	1874	2182	2487	2790	3093	3398	3702	4005	4306	4611	4910	5213
50A	1021	1484	1992	2508	3007	3501	3991	4477	4963	5453	5940	6425	6909	7398	7877	8364

・AF-5: 0.1 MPa to 1.6 MPa AF-5S: 0.1 MPa to 1.0 MPa

<Boiler structure standard>

(kg/h)

Nominal size \ Pressure MPa	0.1	0.2	0.3	0.4	0.5	0.6	0.7	0.8	0.9	1.0	1.1	1.2	1.3	1.4	1.5	1.6
20A	155	227	299	372	443	515	587	659	729	800	872	942	1013	1084	1156	1227
25A	249	365	480	598	711	827	942	1057	1170	1284	1398	1512	1625	1740	1854	1968
32A	398	582	767	954	1136	1320	1503	1687	1867	2050	2232	2413	2594	2777	2959	3141
40A	622	910	1198	1491	1775	2063	2350	2636	2918	3204	3488	3772	4054	4340	4625	4909
50A	998	1461	1923	2393	2848	3311	3770	4229	4681	5140	5597	6052	6505	6963	7420	7876

●For air (20˚C) <Pressure vessel structure standard>

(kg/h)

Nominal size \ Pressure MPa	0.1	0.2	0.3	0.4	0.5	0.6	0.7	0.8	0.9	1.0
20A	257	374	502	630	759	887	1015	1143	1272	1400
25A	413	600	806	1011	1217	1423	1629	1835	2040	2246
32A	659	958	1286	1614	1943	2271	2600	2928	3256	3585
40A	1030	1497	2010	2523	3036	3550	4063	4576	5089	5602
50A	1654	2402	3225	4049	4872	5695	6518	7342	8165	8988

・Please contact us for the calculation procedure for nominal size selection.

AF-4・4M

		-

		Flow area $\frac{\pi}{4}dt$ (mm)	ℓ								

・

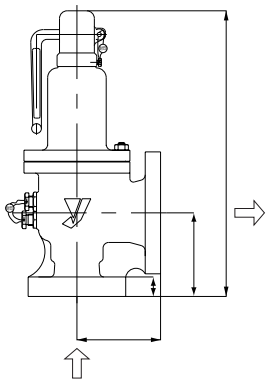

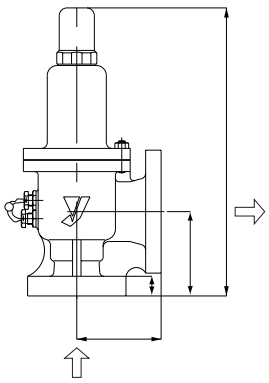

Certified Capacity Table

●For steam (saturation temperature) <Pressure vessel structure standard>

(kg/h)

Nominal size \ Pressure MPa	0.1	0.2	0.3	0.4	0.5	0.6	0.7	0.8	0.9	1.0
25A	181	263	353	444	532	620	707	793	879	966
40A	478	694	932	1174	1407	1638	1868	2095	2323	2552
50A	636	925	1242	1563	1874	2182	2487	2790	3093	3398
65A	1132	1644	2208	2780	3332	3879	4422	4960	5500	6042
80A	1699	2467	3313	4171	4999	5821	6636	7444	8253	9067
100A	4087	5937	7971	10036	12028	14004	15964	17908	19855	21813
125A	4993	7252	9738	12260	14694	17108	19502	21877	24256	26647
150A	7076	10279	13801	17375	20825	24246	27640	31005	34377	37766

<Boiler structure standard>

(kg/h)

Nominal size \ Pressure MPa	0.1	0.2	0.3	0.4	0.5	0.6	0.7	0.8	0.9	1.0
25A	177	258	340	424	504	586	668	749	829	911
40A	467	683	900	1120	1333	1550	1764	1980	2191	2406
50A	622	910	1198	1491	1775	2063	2350	2636	2918	3204
65A	1106	1619	2131	2651	3156	3669	4177	4687	5187	5696
80A	1660	2429	3198	3978	4735	5505	6269	7033	7784	8547
100A	3995	5844	7694	9572	11393	13245	15081	16920	18728	20563
125A	4880	7139	9399	11693	13918	16180	18424	20670	22878	25120
150A	6916	10118	13321	16572	19725	22931	26111	29294	32424	35601

●For air (20˚C) <Pressure vessel structure standard>

(kg/h)

Nominal size \ Pressure MPa	0.1	0.2	0.3	0.4	0.5	0.6	0.7	0.8	0.9	1.0
25A	293	425	571	717	863	1009	1155	1301	1447	1593
40A	774	1124	1510	1895	2280	2666	3051	3436	3822	4207
50A	1030	1497	2010	2523	3036	3550	4063	4576	5089	5602
65A	1832	2662	3574	4486	5398	6311	7223	8135	9047	9960
80A	2750	3994	5363	6732	8101	9470	10839	12207	13576	14945
100A	6616	9610	12903	16196	19489	22782	26076	29369	32662	35955
125A	8082	11739	15762	19785	23808	27831	31854	35877	39900	43923
150A	11454	16638	22339	28041	33742	39444	45146	50847	56549	62250

・Please contact us for the calculation procedure for nominal size selection.

AF-2

Features

1. Lift safety valve, designed in compliance with JIS B 8210 "Spring loaded safety valves for steam boilers and pressure vessels".
2. Larger discharge capacity than lift type.
3. Due to lift lever mechanism a discharge inspection can be manually performed at more than 75% of the opening pressure.
4. Blowdown pressure can be adjusted with a back pressure throttle valve.
5. A material of excellent quality is used for the trim parts. High performance is maintained by precision processing and heat treatment.

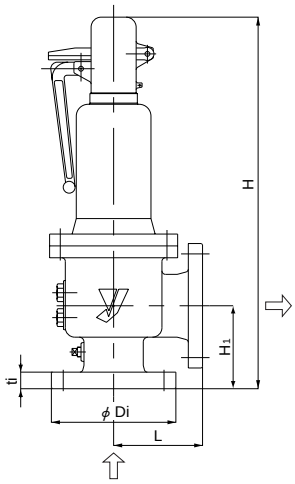

Specifications

Structure		Open type with a lever
Application		Steam
Working pressure		0.18-1.6 MPa
Maximum temperature		220˚C
Material	Valve case	Ductile cast iron
	Spring case	Ductile cast iron
	Valve, valve seat	Stainless steel
Connection		Inlet: JIS B 8210 10K RF flanged * Outlet: JIS B 2239 10K FF flanged

* JIS B 8210 20K RF flanged when working pressure is more than 1.0 MPa.

Dimensions and Weights

Nominal size	Inlet diameter x Throat diameter x Outlet diameter	Flow area $\frac{\pi}{4}dt^2$ (mm²)	Lift ℓ (mm)	Dimension (mm)			Connection (mm)						Outlet	Weight (kg)
							Inlet: JIS B 8210 10K							
				L	H_1	H	Di	Ci	gi	ti	fi	ni x hi		
65A	65 x 49 x 90	1884.7	11.1	150	142	630	200	160	105	30	2	8 x 23	100A	50.0
80A	75 x 57 x 100	2550.7	13.0	165	160	682	210	170	125	32	2	8 x 23		62.3

Certified Capacity Table

●For steam (saturation temperature) <Pressure vessel structure standard> (kg/h)

Pressure MPa / Nominal size	0.2	0.3	0.4	0.5	0.6	0.7	0.8	0.9	1.0	1.1	1.2	1.3	1.4	1.5	1.6
65A	2467	3313	4171	4999	5821	6636	7444	8253	9067	9877	10684	11488	12300	13098	13907
80A	3339	4484	5645	6766	7878	8981	10074	11170	12271	13368	14460	15547	16647	17727	18821

<Boiler structure standard> (kg/h)

Pressure MPa / Nominal size	0.2	0.3	0.4	0.5	0.6	0.7	0.8	0.9	1.0	1.1	1.2	1.3	1.4	1.5	1.6
65A	2429	3198	3978	4735	5505	6269	7033	7784	8547	9306	10063	10816	11578	12338	13096
80A	3287	4328	5385	6409	7451	8484	9518	10535	11567	12595	13619	14638	15669	16698	17725

・Please contact us for the calculation procedure for nominal size selection.

Feature		Lift type / Closed type	Lift type / Lever type	
Model		AL-150	AL-150L	AL-150HL
Picture			 AL-150L	
Application		Steam, Air, Cold and hot water, Oil, Other non-dangerous fluids	Steam, Air	
Working pressure		0.05-1.0 MPa	0.05-1.0 MPa	1.0-1.6 MPa
Max. temperature		220˚C *	220˚C	
Connection		JIS Rc screwed	JIS Rc screwed	
Material	Spring case	Cast bronze	Cast bronze	
	Valve	Stainless steel (SCS14A)	Stainless steel (SCS14A)	
	Valve seat	Stainless steel (SCS14A)	Stainless steel (SCS14A)	
Size		15A-50A	15A-50A	
Others		* The maximum temperature is 150˚C when using for water, oil or other liquids.	—	

Feature		Relief valve / Diaphragm type	Full bore / SCPH	Full bore / SCS
Model		AL-24	AF-6H	AF-6HS
Picture			 AF-6H	
Application		Cold and hot water	Air, Other non-dangerous fluids	
Working pressure		0.1-0.7 MPa *1	0.1-1.96 MPa	
Max. temperature		60˚C	250˚C *1	
Connection		JIS Rc screwed	Inlet: JIS 20K RF flanged Outlet: JIS 10K FF flanged *2	
Material	Valve case	Cast bronze *2	Cast carbon steel	Cast stainless steel
	Valve	NBR *3	Stellite overlaid stainless steel	
	Valve seat	Stainless steel	Stellite overlaid stainless steel	
	Diaphragm	NBR (heat-resistant nylon contained)	—	
Size		15A-25A	25A-100A	
Others		*1 Available with working pressure between 0.05 MPa and 0.1 MPa. *2 Available with NPb-treated. *3 Available with FKM (AL-24F).	*1 It may change depending on fluid and pressure. *2 The inlet flange is thicker than JIS standard value.	

Feature		Full bore / Screwed	Full bore / Lever, SCPH	Full bore / Closed, SCPH
Model		**AF-1**	**AF-7**	**AF-7M**
Picture				
Application		**Steam**	**Steam, Air, Other non-dangerous fluids**	**Air, Other non-dangerous fluids**
Working pressure		0.18-1.6 MPa	0.1-1.0 MPa *	
Max. temperature		220˚C	350˚C	300˚C
Connection		Inlet: JIS R screwed Outlet: JIS Rp screwed	Inlet: JIS 10K RF flanged Outlet: JIS 10K FF flanged	
Material	Valve case	Ductile cast iron	Cast carbon steel	
	Valve	Stainless steel	Stainless steel	
	Valve seat	Stainless steel	Stainless steel	
Size		20A-50A	25A-100A	
Others		—	* Available with working pressure between 1.0 MPa and 1.6 MPa (Inlet: JIS 20K RF flanged).	