ACTUATOR ORIENTATION

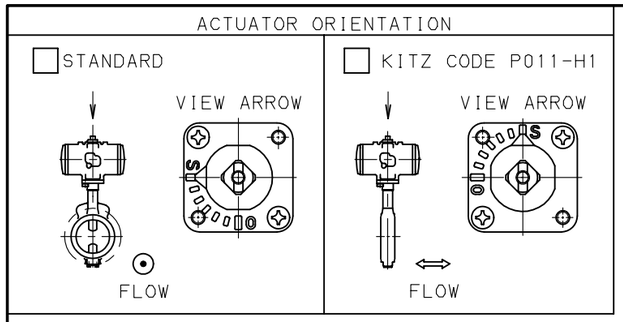

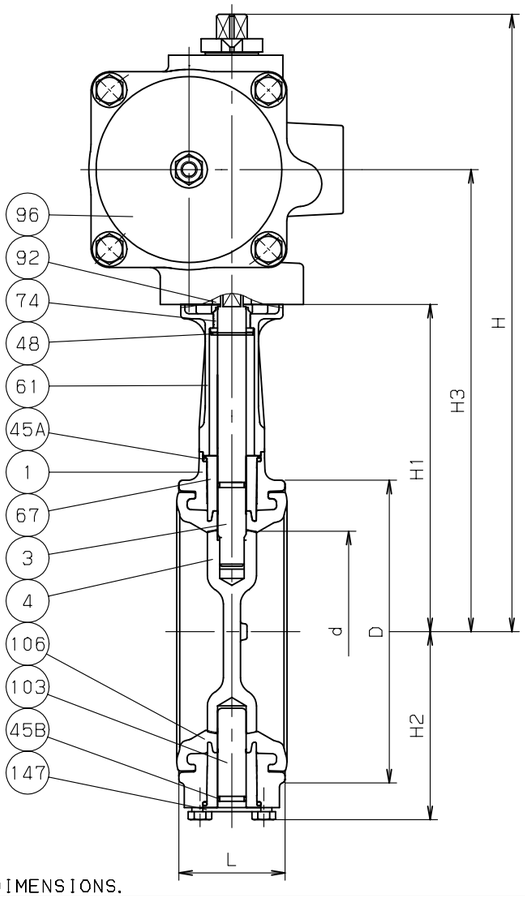

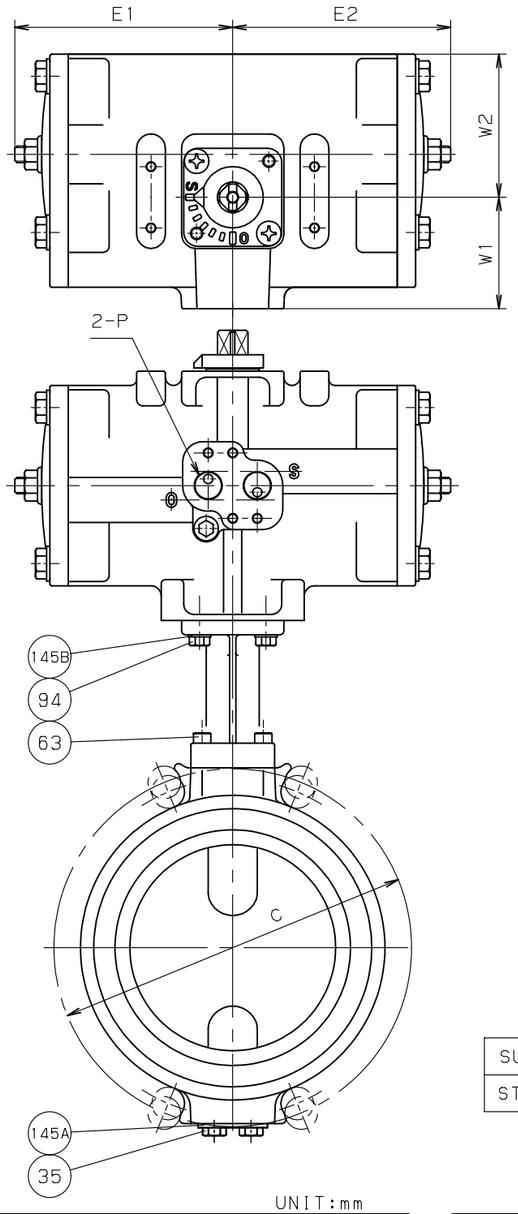

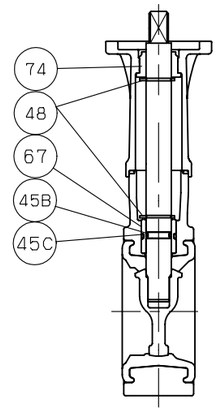

SIZE 40 ONLY

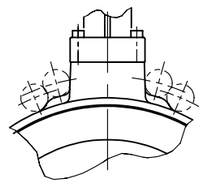

FORM OF THE INSTALL GUIDE (SIZE 80, 200)

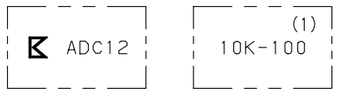

MARKING ON THE BODY

SUPPLY AIR PRESSURE MPa {kgf/cm²}	
STANDARD PRESSURE	0.39 {4}

NO	NAME OF PARTS	QTY	MATERIALS	SPECIFICATIONS
				JIS SPEC.
1	BODY	1	ALUMINUM DIE-CAST	ADC12
3	STEM	1	STAINLESS STEEL	SUS403 or SUS410
4	DISC	1	STAINLESS STEEL	SCS14A
35	END PLATE BOLT	2	STAINLESS STEEL	SUS304 (SIZE 50-200)
45A	O RING	2	EPDM	(SIZE 50 - 200)
45B	O RING	2	EPDM	(SIZE 50 - 200)
		1	EPDM	(SIZE 40 ONLY)
45C	O RING	1	EPDM	(SIZE 40 ONLY)
48	SNAP RING	1	STAINLESS STEEL	SUS304 (SIZE 50-200)
		2	STAINLESS STEEL	SUS304 (SIZE 40 ONLY)
61	STAND	1	STAINLESS STEEL	SCS13A
63	STAND BOLT	4	STAINLESS STEEL	JIS A2-70 (SIZE 50-200)
		2	STAINLESS STEEL	JIS A2-70 (SIZE 40 ONLY)
67	BEARING	2	POLYPHENYLENESULFIDE	(SIZE 50 - 200)
		1	POLYPHENYLENESULFIDE	(SIZE 40 ONLY)
74	THRUST BEARING	1	POLYETHYLENE	
92	CONNECTOR	1	SUS304	(SIZE 65, 200)
94	BOLT	4	STAINLESS STEEL	SUS304
96	PNEUMATIC ACTUATOR	1		
103	BOTTOM STEM	1	STAINLESS STEEL	SUS403 or SUS410
				(SIZE 50 - 200)
106	SEAT RUBBER	1	EPDM	
145A	SPRING WASHER	2	STAINLESS STEEL	SUS304 (SIZE 50-200)
145B	SPRING WASHER	4	STAINLESS STEEL	SUS304
147	END PLATE	1	STAINLESS STEEL	SUS430 (SIZE 50-200)

STANDARD		
	FACE TO FACE OR END TO END	JIS B2032 46 SERIES (2)
	END CONNECTION	WAFER TYPE (JIS 5/10K)
	WALL THICKNESS	KITZ STANDARD
	PRESSURE TEST	JIS B2032
FIGURE		FA-10XJME

DIMENSIONS. UNIT:mm

NOMINAL SIZE mm	NOMINAL SIZE in.	d	H	H1	H2	H3	L	D	C 5K	C 10K	ACTUATOR SIZE	APPROX. MASS (kg)	
40	1.1/2	40	251	128	40	181	33	80	95	105	1	2.3	
50	2	50	255	132	66	185	43	93	105	120	1	2.7	
65	2.1/2	65	287	141	74	207	46	118	130	140	2	4.2	
80	3	80	295	149	83	215	46	129	145	150	2	4.4	
100	4	100	306	160	94	226	52	149	165	175	2	4.8	
125	5	125	357	194.5	122	271	56	184	200	210	3	8.1	
150	6	150	369	207	135	283	56	214	230	240	3	9.1	
200	8	196	435	233.5	161	327	60	258	280	290	4	14	

UNIT:mm

PNEUMATIC ACTUATOR TYPE: FA-					
SIZE	E1	E2	W1	W2	P
1	87	87	50	54	Rc1/4
2	107	107	54	70	Rc1/4
3	128	128	57	87	Rc1/4
4	160	160	68	111	Rc1/4

NOTE (1) VALVE SIZE (mm) IDENTIFICATION.
(2) SIZE 40 IN ACCORDANCE WITH JIS B2002 46 SERIES.

5/10K
ALUMINUM BUTTERFLY VALVES
CENTER DRIVE DISC
WITH PNEUMATIC ACTUATOR

DATE APPD	JUL.31' 09	DRAWING NO	△		
APPD BY	S. SANADA	997-F50001	△		
CHKD BY	H. NAKAGAWA		△		
DSGND BY	S. KAJI		△		
DRAWD BY	Y. NAKAYAMA	REV-08	MARK	DATE	BY

KITZ CORPORATION

KITZ