ROTEX POSITIONER

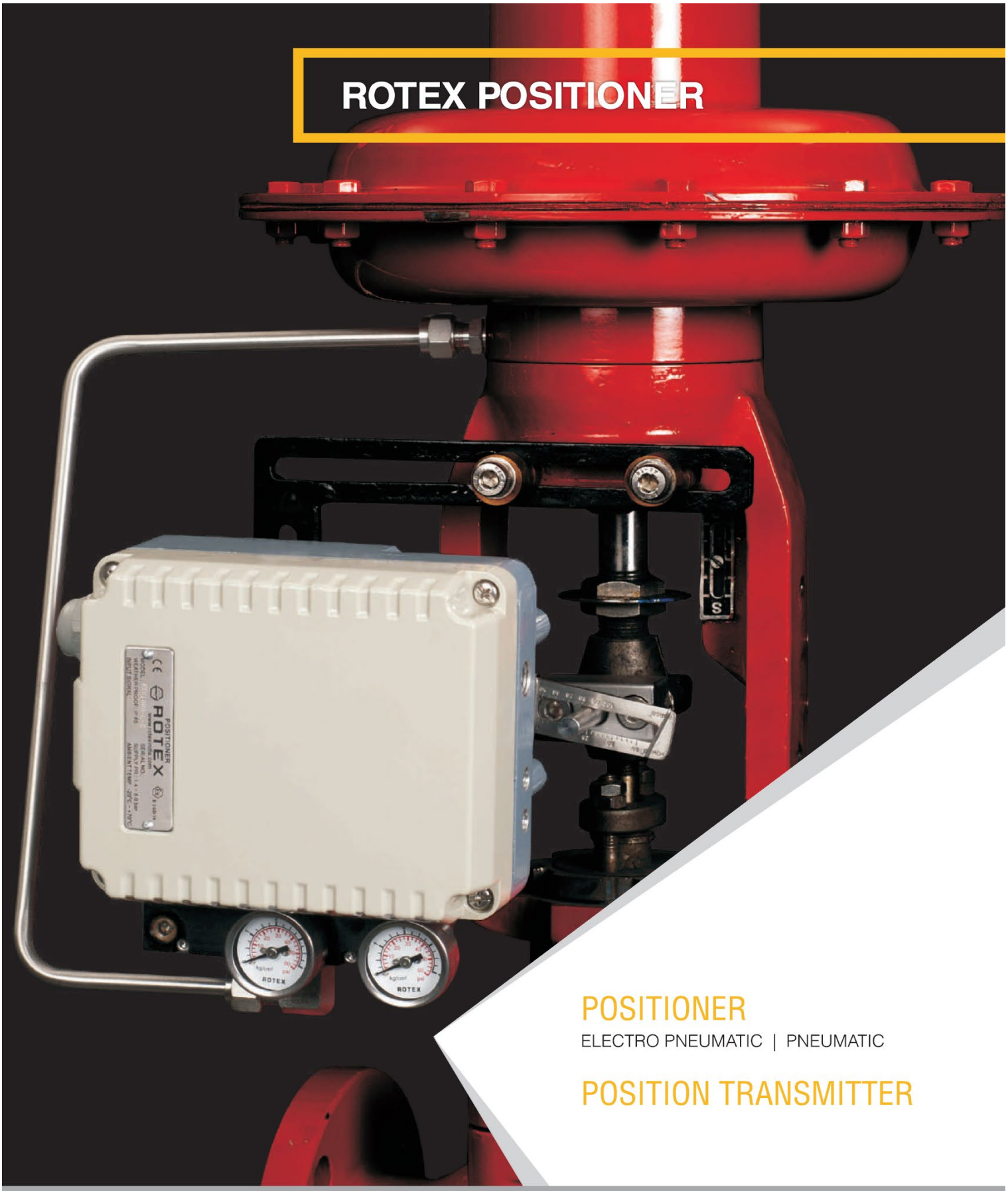

POSITIONER

ELECTRO PNEUMATIC | PNEUMATIC

POSITION TRANSMITTER

ROTEX

Engineering For The Future

Edit by K C Mahanakorn Co., Ltd. / Mr.Chirawat Wongsaree/ Sales Manager/ Bangkok Thailland.

ROTEX
Engineering For The Future

ROTEX POSITIONER

FEATURES

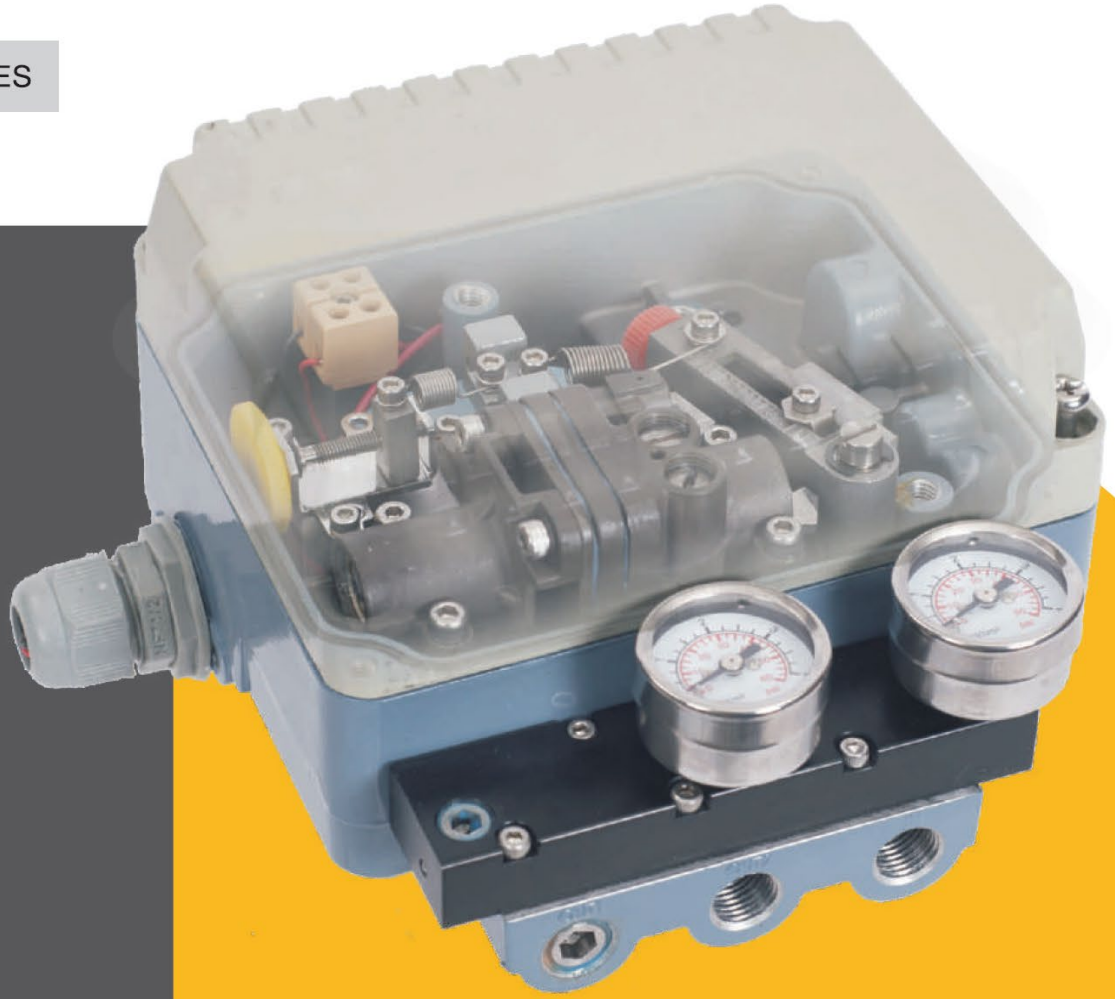

- Unique polymer diaphragms developed by Rotex offer long life and prevent malfunctioning of the device.
- Rotex poppet has all of its internal moving parts in Stainless Steel (SS). This helps fight corrosion and offers an improved surface finish, ensuring long-term repeatability.
- Rotex has the least air consumption as compared to other positioner manufacturers. The metal spool and metal poppet ensure minimum leakage.
- Rotex high temperature elastomer and class H E/P coil promise resistance to high temperature applications.
- Rotex has a strong service team across the globe and provides spares for all the items, leading to low installation and maintenance costs.

Edit by K C Mahanakorn Co., Ltd. / Mr.Chirawat Wongsaree/ Sales Manager/ Bangkok Thailland.

ROTEX
Engineering For The Future

WHY ROTEX POSITIONERS?

- Does your positioner start to malfunction over a period?
- Do you need to reset the zero and the span often?
- Do you lose air over and above the theoretically calculated value?
- Does your positioner fail in moderately high temperature zones?
- Do you get spares and service when needed?

ROTEX Positioners
solve all your problems and guarantee performance!

SEE HOW

Edit by K C Mahanakorn Co., Ltd. / Mr.Chirawat Wongsaree/ Sales Manager/ Bangkok Thailland.

ROTEX
Engineering For The Future

ROTEX POSITIONER

PRODUCT RANGE



RTX 1000 R/L



RTX 1000 E



RTX 1200 R



RTX 1300



RTX 1000 R + Transmitter



RTX 1000 L + Transmitter

Edit by K C Mahanakorn Co., Ltd. / Mr.Chirawat Wongsaree/ Sales Manager/ Bangkok Thailland.

ROTEX
Engineering For The Future

PRODUCT RANGE



RTX 1300 +Transmitter



Transmitter



SMART RTX 7

Also available:

- RTX 1000 R / L in SS
- SMART RTX 7 in SS
- Transmitter in SS

Edit by K C Mahanakorn Co., Ltd. / Mr.Chirawat Wongsaree/ Sales Manager/ Bangkok Thailland.

ROTEX
Engineering For The Future

ROTEX POSITIONER

FEATURES SUMMARY

Type	P/P				E/P		Smart				
Model	RTX 1200	RTX 1200 + Transmitter Contactless (CS)	RTX 1300	RTX 1300+ Transmitter Contactless	RTX 1000	RTX 1000 + Transmitter Contactless (CS)	RTX 6	RTX 7	RTX 8	RTX 9	RTX 5 (IPST)
HARDWARE											
Technology	Flapper Nozzle	Flapper Nozzle	Flapper Nozzle	Flapper Nozzle	Flapper Nozzle	Flapper Nozzle	Piezo	Piezo	Piezo	Piezo	Piezo
Local Buttons	×	Only for transmitter	×	Only for transmitter	×	Only for transmitter	✓	✓	✓	✓	✓
LCD Display	×	Only for transmitter	×	Only for transmitter	×	Only for transmitter	✓	✓	✓	✓	✓
Double Acting/ Single	✓	✓	✓	✓	✓	✓	✓	✓	✓	✓	✓
Rotary/Linear	✓	✓	Linear	Linear	✓	✓	✓	✓	✓	✓	✓
Feedback	X	✓	×	✓	×	✓	✓	✓	✓	✓	✓
Fail Safe	✓	✓	✓	✓	✓	✓	✓	✓	✓	✓	✓
Fail Freeze	×	×	×	×	×	×	✓	✓	✓	✓	✓
IP rating	IP 66	IP 66	IP 66	IP 66	IP 66	IP 66	IP 66	IP 66	IP 66	IP 66	IP 66
Natural Gas Capability	×	×	×	×	×	×	✓	✓	✓	✓	✓
Enclosure Material	AL/SS	AL/SS	AL/SS	AL/SS	AL/SS	AL/SS	AL/SS	AL/SS	AL/SS	AL/SS	AL/SS
Remote Mounting	×	×	×	×	×	×	✓	✓	✓	✓	✓
Operation	Poppet	Poppet	Spool	Spool	Poppet	Poppet	Servo	Servo	Servo	Servo	Servo
Exhaust port	×	×	×	×	×	×	✓	✓	✓	✓	✓
Encapsulated Electronics	×	×	×	×	×	×	✓	✓	✓	✓	✓
DIAGNOSTICS											
No Dead zone	×	×	×	×	×	×	✓	✓	✓	✓	✓
Alerts	×	×	×	×	×	×	×	✓	✓	✓	✓
Pressure Transducer	×	×	×	×	×	×	×	×	×	✓	✓
Partial Stroke Test	×	×	×	×	×	×	×	×	×	×	×
Online Diagnostics	×	×	×	×	×	×	×	×	×	✓	✓
Offline Test	×	×	×	×	×	×	×	×	×	✓	✓

Edit by K C Mahanakorn Co., Ltd. / Mr.Chirawat Wongsaree/ Sales Manager/ Bangkok Thailland.

ROTEX
Engineering For The Future

FEATURES SUMMARY

Type	P/P				E/P		Smart				
Model	RTX 1200	RTX 1200 + Transmitter Contactless (CS)	RTX 1300	RTX 1300+ Transmitter Contactless	RTX 1000	RTX 1000 + Transmitter Contactless (CS)	RTX 6	RTX 7	RTX 8	RTX 9	RTX 5 (IPST)
FEEDBACK MODULE											
Analog 4-20 mA	×	✓	×	✓	×	✓	✓	✓	✓	✓	✓
LCD display	×	✓	×	✓	×	✓	Buit-in	Buit-in	Buit-in	Buit-in	Buit-in
Push button for setting	×	✓	×	✓	×	✓	Buit-in	Buit-in	Buit-in	Buit-in	Buit-in
21 Freely configurable setpoint	×	✓	×	✓	×	✓	Buit-in	Buit-in	Buit-in	Buit-in	Buit-in
COMMUNICATION											
HART (version 5 and 7)	×	×	×	×	×	×	×	✓	✓	✓	✓
CERTIFICATION											
Explosion Proof	✓	✓	×	×	✓	✓	✓	✓	✓	✓	✓
Intrinsically Safe	✓	✓	×	×	✓	✓	✓	✓	✓	✓	✓
ATEX/ IECEx	✓	✓	×	×	✓	✓	✓	✓	✓	✓	✓
CuTR	✓	✓	×	×	✓	✓	✓	✓	✓	✓	✓
SIL Certified	×	✓	×	×	×	×	×	×	×	×	✓
Peso	✓	✓	×	×	✓	✓	✓	✓	✓	✓	✓

Edit by K C Mahanakorn Co., Ltd. / Mr.Chirawat Wongsaree/ Sales Manager/ Bangkok Thailland.

ROTEX
Engineering For The Future

ROTEX POSITIONER

ELECTRO-PNEUMATIC POSITIONER RTX1000

FEATURES

- Special low pressure diaphragm direct acting valve ensures quick and precise response to minor changes in signal pressure
- Low hysteresis increases overall efficiency
- Excellent performance under vibration up to 4g (3mm amplitude)
- High life of diaphragm and zero maintenance
- Compact design, rugged construction with a rigid ISO 5211 mounting
- Wide range of zero and span adjustment for easy and precise calibration
- Stable, fast and accurate response with change in supply pressure due to unique poppet and diaphragm valve design
- All internal parts are hard anodized
- Split range control can be easily adopted by change in few internal parts
- Simple to convert from direct acting to reverse acting or vice versa
- Orifice option prevents from hunting and also for controlling speed
- Bright visual indicator on both flat and high dome type positioners
- Internal and external mounting of the position transmitter and limit switch available
- Internal circuit of the positioner is highly corrosion resistant as no part (metal plate) is exposed
- IP 66 protection
- CE certified



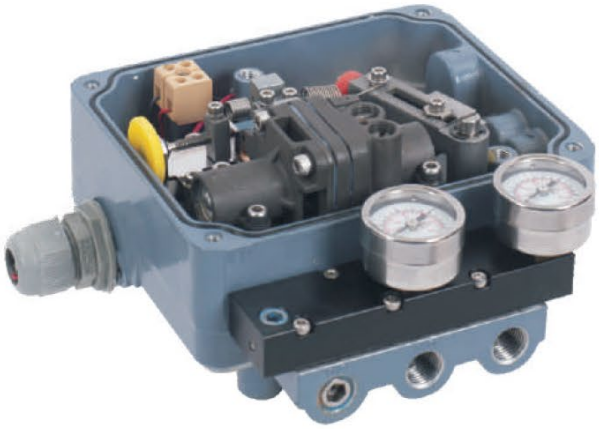









TORQUE MOTOR	HIGHLY BALANCED SPRING MECHANISM	ADAPTABILITY
- High performance Nickel flapper - Unique rocker mechanism to give low dead band - Non sliding parts	- High repeatability and linearity - Critically designed springs avail a wide range of zero and span setting	- Positioner can be easily converted from direct acting to reverse acting and vice versa - SS cam for long life - Unique clamping mechanism

Edit by K C Mahanakorn Co., Ltd. / Mr.Chirawat Wongsaree/ Sales Manager/ Bangkok Thailland.

ROTEX
Engineering For The Future

ELECTRO-PNEUMATIC POSITIONER RTX1000

TECHNICAL SPECIFICATIONS

TYPE	LINEAR		ROTARY	
Operation	Single Acting	Double Acting	Single Acting	Double Acting
Supply Pressure	0.3 bar above actuator requirement (minimum 1.4 bar and maximum 7 bar)			
Input Signal	4 to 20 mA DC constant current with maximum 30 VDC			
Stroke	10-150 mm		0-90°	
Air Connection	1/4" BSP / NPT			
Explosion Proof	ATEX			
Protection	IP 66			
Cam	Equal / Square / Square Root			
Ambient Temperature	-40 °C to +120 °C, see ordering code			
Linearity	± 1%	± 2%	± 1%	± 2%
Hysteresis	± 1%	± 1%	± 1%	± 1%
Sensitivity	± 0.2%	± 0.5%	± 0.5%	± 0.5%
Repeatability	± 0.5%	± 0.5%	± 0.5%	± 0.5%
Internal Bleeding	3 lpm (supply pressure 1.4 kgf / cm2), 11 lpm (supply pressure 4.0 kgf / cm2)			
Flow Capacity	80 lpm (supply pressure 1.4 kgf / cm2), 200 lpm (supply pressure 4.0 kgf / cm2)			
Material	Aluminium Die Casting			
Weight	2.9 Kg	2.9 Kg	3 Kg	3 Kg

BUILT IN SMART TRANSMITTER







Edit by K C Mahanakorn Co., Ltd. / Mr.Chirawat Wongsaree/ Sales Manager/ Bangkok Thailland.

ELECTRO-PNEUMATIC POSITIONER RTX1000

ROTEX
Engineering For The Future

ORDERING CODE

1

MODEL	
Model	**Cat code**
RTX1000 ①	RTX1000
RTX1000E ②	RTX1000E

2

TYPE	
Type	**Cat code**
Rotary	R
Linear ⑤	L

3

ACTUATING TYPE	
Actuating type	**Cat code**
Double acting	D
Single acting	S

4

ORIFICE	
Orifice	**Cat code**
Nil	*
1 mm	1
2 mm	2

5

FEEDBACK LEVER	
Feedback lever/Bracket	**Cat code**
Nil	*
0-25	25
26-100	100
101-200	200
80 X 30 - 20 MM PINION HIGHT	M1
80 X 30 - 30 MM PINION HIGHT	M21
80 X 30 - 50 MM PINION HIGHT	M3
130 X 30 - 30 MM PINION HIGHT	M132
130 X 30 - 50 MM PINION HIGHT	M133

6

CONDUIT ENTRY	
Conduit Entry	Cat code
½" NPT	*
M20	3M

7

TEMPERATURE	
Temperature	**Cat code**
-20 to +80 °C	*
-40 to +80 °C	HN
-20 to +120 °C	AV

8

INDICATOR	
Indicator	**Cat code**
Flat Indicator	*
High dome	HD
Nil ③	ND

9

PTR	
PTR	**Cat code**
Nil	*
Weather proof JB	WJB
Internal contactless PTR with weather proof JB	CS
External contactless PTR with weather proof JB	ECS
External contactless PTR with Exd JB	EECS

10

GAUGE	
Gauge	**Cat code**
Dial 40mm,0-10Bar, MS	41
Dial 30mm, 0-10Bar, SS④	32
Dial 30mm, 0-4Bar, SS ④	33
Dial 40mm,0-10Bar, SS	42

11

SHAFT	
Shaft	**Cat code**
NAMUR shaft	*
Shaft with across flat(Non NAMUR)	S1
NAMUR A/F and 20mm length	S2

NOTE

* Default

① For this model PTR can be Nil, Internal PTR(IP) or External PTR in weather proof JB (EP)

② For this model PTR can be Nil or External PTR in Ex d JB and Temperature will be -20 to +80 °C

③ Indicator is Nil then available shaft option will be S2

④ Should be opted only when positioner type is Linear

⑤ For type Linear, indicator option available is Nil and shaft option available is S2

For any special requirement please coordinate with factory, ordering code for special will be MODEL-SUNUMBER

Edit by K C Mahanakorn Co., Ltd. / Mr.Chirawat Wongsaree/ Sales Manager/ Bangkok Thailland.

ROTEX
Engineering For The Future

ROTEX POSITIONER **OPTION**

POSITION TRANSMITTER (PTR)







FEATURES

- Contactless position feedback
- Extremely reliable under vibration
- Life is practically infinite, as compared to a potentiometer, which wears every time it moves
- Microcontroller, MSP430 based transmitter, extremely reliable with a high performance chip
- Easy to set, by just pushing set buttons
- Digital display for the easy readability
- 21 freely configurable set points, for 4-20 mA output for variable span.
- Weather proof, flameproof and explosion proof available
- IP 67 Rating
- Available in Aluminum, Stainless Steel and Polycarbonate (Makrolon®)

Edit by K C Mahanakorn Co., Ltd. / Mr.Chirawat Wongsaree/ Sales Manager/ Bangkok Thailland.

ROTEX
Engineering For The Future

POSITION TRANSMITTER (PTR)

SPECIFICATIONS

Type	Weatherproof/ Flameproof
Field Calibration	Auto calibration with stroke settings
Custom Set Point	21 freely configurable set points
Position Sensing	Contactless
Indication	LCD display - Current (mA) and Position (%)
Setup	Push button on device
Conduit Entry	½" NPT (F) or M20
Temperature	-20 °C to +60 °C (Standard) -40 C to +80 °C (On Request)

CHARACTERISTICS

Accuracy	0.3% of full scale
Repeatability	0.2% of full scale
Hysteresis	0.3% of full scale
Linearity	0.2% of full scale
Supply Voltage	24V DC + / - 10% (Loop Feedback)
Supply Connection	Screw Terminal (standard), M8 socket 3/4 pin (M) (optional)
Operating Range	3.6 - 21mA
Influence of Temperature	0.35% / 10 °K
Transmission Error	< 0.3%
Electromagnetic	CE, directive EMC 89 / 336 / EEC Compatibility

Edit by K C Mahanakorn Co., Ltd. / Mr.Chirawat Wongsaree/ Sales Manager/ Bangkok Thailland.

ROTEX
Engineering For The Future

ROTEX POSITIONER

POSITION TRANSMITTER (PTR)

DIMENSION DETAILS

CONTACT LESS POSITION TRANSMITTER

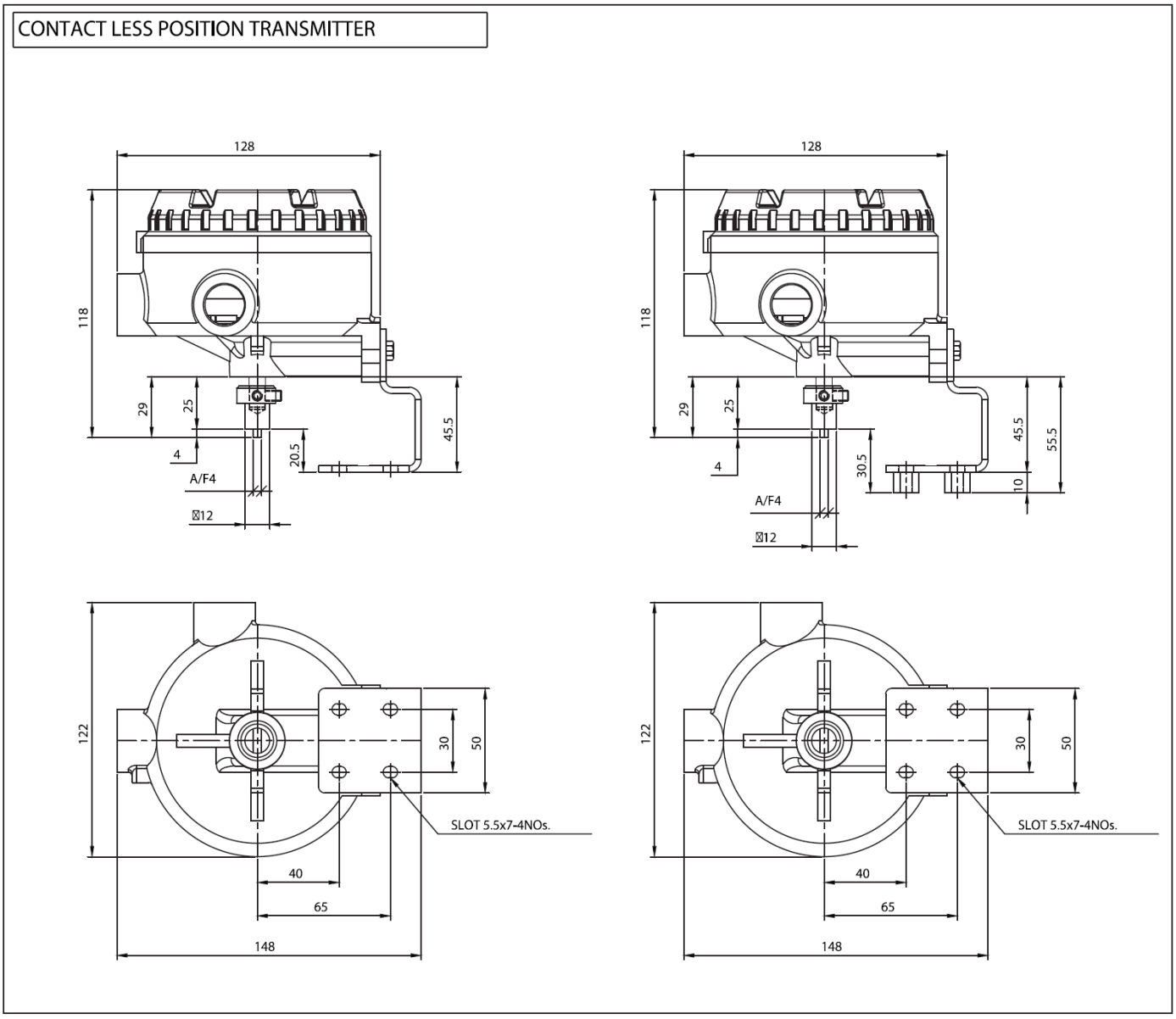

ROTEX
Engineering For The Future

POSITION TRANSMITTER (PTR)

ORDERING CODE

1

MODEL	
Weatherproof	IPTR W
Flameproof	IPTR X

2

CONDUIT ENTRY	
1/2"NPT (F)	4R
3/4" NPT (F)	6R
M20X1.5 (F)	3M

3

BODY & COVER	
ALUMINIUM	*
CF8M	B5

4

BRACKET
Contact Factory

5

CERTIFICATE	
None	*
BIS	B
CMRI	C
ATEX	A
PESO	P

ROTEX
Engineering For The Future

ROTEX GROUP SALES HEAD QUARTER
B/703/704, Western Edge-II,
Off Western Express Highway,
Borivli (East), Mumbai-400066
Phone: +91 22 42111444
Fax: +91 22 42111400
Email: sales-bby@rotexautomation.com

www.rotexautomation.com

ROTEX CONTROLS, USA
21 Sullivan Parkway
Fort Edward, NY 12828
Phone: (888) 813 – 9772
Fax : (866) 478 – 9620
Email : sales@rotexcontrolsusa.com

Rotex : 18 : 3M : 04/18

Edit by K C Mahanakorn Co., Ltd. / Mr.Chirawat Wongsaree/ Sales Manager/ Bangkok Thailland.

ELECTRO - PNEUMATIC POSITIONER RTX 1000 + PTR (M)

DIMENSION DETAILS

